LUNA FIRE BOWL
Powder Coat

THE OUTDOOR PLUS™
AMERICAN MADE FIRE & WATER FEATURES

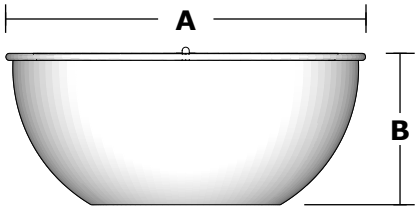

FRONT VIEW

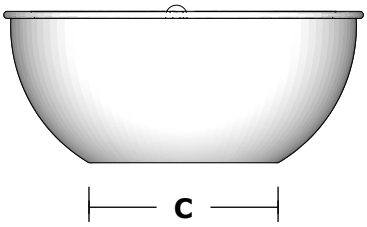

SIDE VIEW

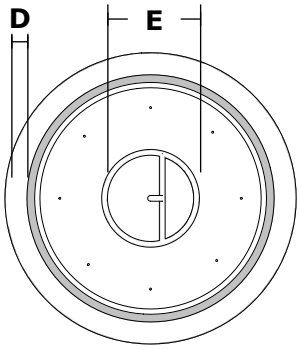

TOP VIEW



ISOMETRIC VIEW

PART NUMBER	A	B	C	D	E	BTU
OPT-LUNFOPC30	30"	15"	14"	2"	12"	65,000
OPT-LUNFOPC38	38"	16"	20"	2½"	12"	65,000

Gas Requirements

Gas Type: Natural Gas or Liquid Propane
Gas Inlet: ½"
Total BTU's: 65K

All Match Lit Units up to 65K BTU are LC Certified
All Electronic Units are CSA Certified

What's Included?

All fire pits come complete with fire media, including lava rock

Match Lit Unit:
- Pan, Burner, Gas Orifice, Gas Hose

Low Voltage Unit:
- Pan, Burner, Gas Orifice, Gas Hose, Pilot Ignitor

12V ELECTRONIC IGNITION
ANSI Z21.97-(2017) / CSA 2.41-(2017)

Important: Bowls do not include a key valve as standard.
*If you require **key valve installation**, please add **OPT-KVI** to your order.*

Drawn By	Andrea S.
Date Created	June 9, 2026

Proprietary & Confidential: The information contained in this drawing is the sole property of ***The Outdoor Plus***. Any reproduction or as a whole without written permission of ***The Outdoor Plus*** is prohibited.