REGAL FIRE PIT - 48"

Hammered Copper/Corten Steel/
Stainless Steel

THE OUTDOOR PLUS
USA MANUFACTURER OF FIRE & WATER FEATURES

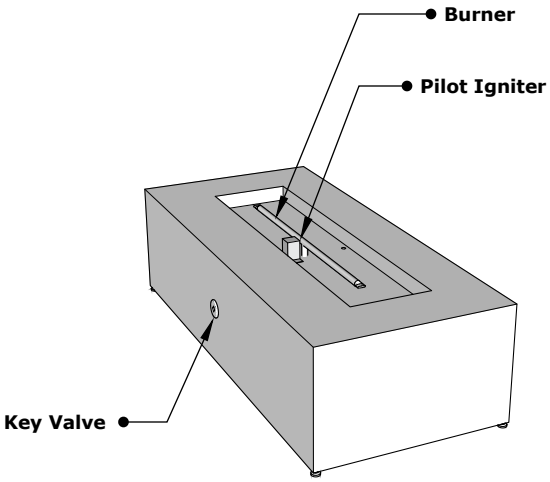

ISOMETRIC VIEW

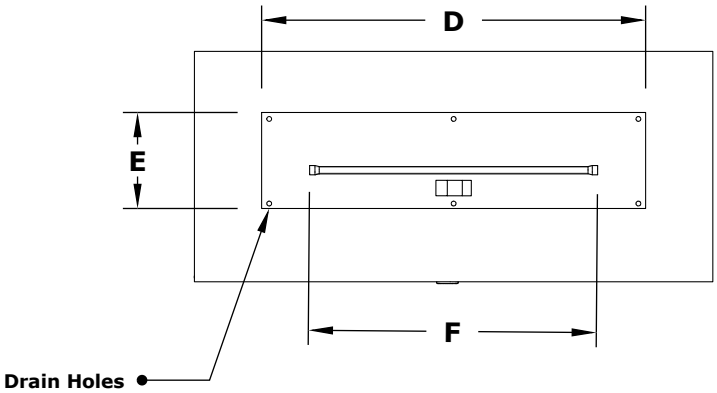

TOP VIEW

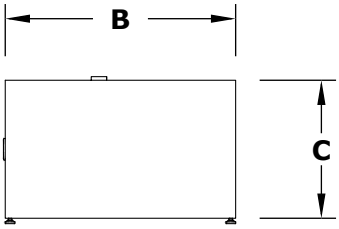

RIGHT SIDE VIEW

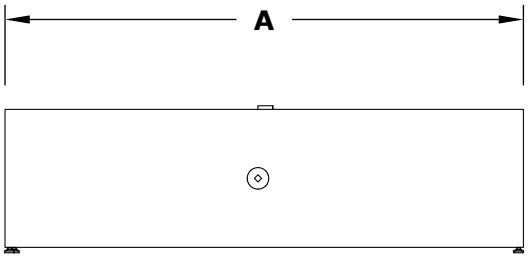

FRONT SIDE VIEW

Hammered Copper	Corten Steel	Stainless Steel	A	B	C	D	E	F	BTU
OPT-RGLCPR48	OPT-RGLCS48	OPT-RGLSS48	48"	24"	13"	34"	10"	28"	45,000
OPT-RGLCPR48EKIT	OPT-RGLCS48EKIT	OPT-RGLSS48EKIT	48"	24"	13"	34"	10"	28"	45,000
OPT-RGLCPR48E12V	OPT-RGLCS48E12V	OPT-RGLSS48E12V	48"	24"	13"	34"	10"	28"	45,000
OPT-RGLCPR48FSML	OPT-RGLCS48FSML	OPT-RGLSS48FSML	48"	24"	13"	34"	10"	28"	45,000
OPT-RGLCPR48FSEN	OPT-RGLCS48FSEN	OPT-RGLSS48FSEN	48"	24"	13"	34"	10"	28"	45,000

Fire Pit Material: Various Materials
Pan Material: 304 Stainless Steel Burner
Material: 304 Stainless Steel

Standard 2" Depth on all pans

110V ELECTRONIC IGNITION
ANSI Z21.97-(2017) / CSA 2.41-(2017)

C US

Match Lit Unit Includes: Pan, Burner, Gas Orifice, Gas Hoses, Key Valve, Key,
110v Ignition Unit Includes: Pan, Burner, Gas Orifice, Gas Hoses, Key Valve, Key, Plug & Play Electronic Valve, Pilot Igniter.

Proprietary & Confidential: The information contained in this drawing is the sole property of ***The Outdoor Plus***. Any reproduction or as a whole without written permission of ***The Outdoor Plus*** is prohibited.

REGAL FIRE PIT - 54"

Hammered Copper/ Corten Steel/ Stainless Steel

THE OUTDOOR PLUS
USA MANUFACTURER OF FIRE & WATER FEATURES

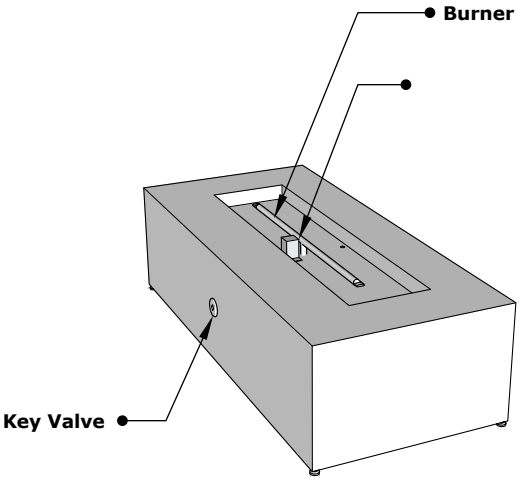

ISOMETRIC VIEW

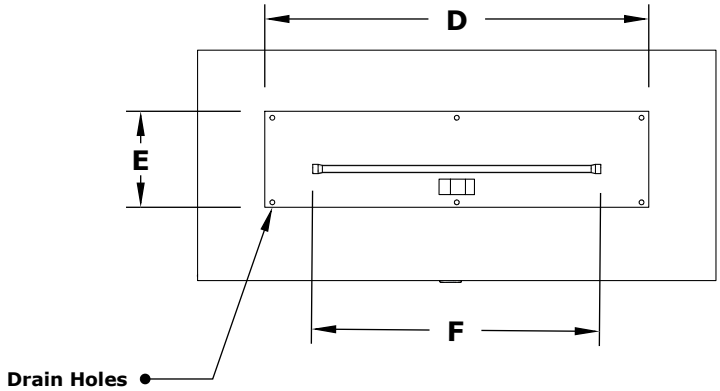

TOP VIEW

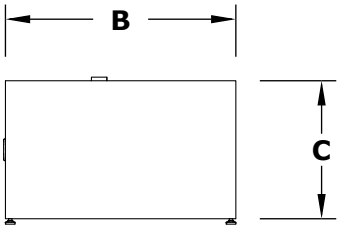

RIGHT SIDE VIEW

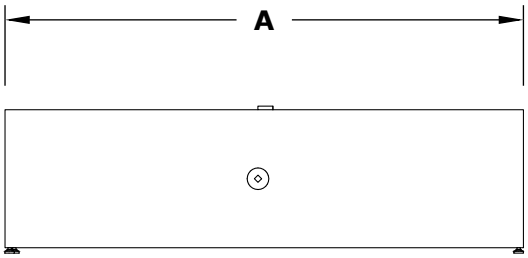

FRONT SIDE VIEW

Hammered Copper	Corten Steel	Stainless Steel	A	B	C	D	E	F	BTU
OPT-RGLCPR54	OPT-RGLCS54	OPT-RGLSS54	54"	24"	13"	40"	10"	36"	65,000
OPT-RGLCPR54EKIT	OPT-RGLCS54EKIT	OPT-RGLSS54EKIT	54"	24"	13"	40"	10"	36"	65,000
OPT-RGLCPR54E12V	OPT-RGLCS54E12V	OPT-RGLSS54E12V	54"	24"	13"	40"	10"	36"	65,000
OPT-RGLCPR54FSML	OPT-RGLCS54FSML	OPT-RGLSS54FSML	54"	24"	13"	40"	10"	36"	65,000
OPT-RGLCPR54FSEN	OPT-RGLCS54FSEN	OPT-RGLSS54FSEN	54"	24"	13"	40"	10"	36"	65,000

Fire Pit Material: Various Materials
Pan Material: 304 Stainless Steel
Burner Material: 304 Stainless Steel

Standard 2" Depth on all pans

110V ELECTRONIC IGNITION
ANSI Z21.97-(2017) / CSA 2.41-(2017)

C US

Match Lit Unit Includes: Pan, Burner, Gas Orifice, Gas Hoses, Key Valve, Key,
110v Ignition Unit Includes: Pan, Burner, Gas Orifice, Gas Hoses, Key Valve, Key, Plug & Play Electronic Valve, Pilot Igniter.

Proprietary & Confidential: The information contained in this drawing is the sole property of ***The Outdoor Plus***. Any reproduction or as a whole without written permission of ***The Outdoor Plus*** is prohibited.

REGAL FIRE PIT - 60"

Hammered Copper / Corten Steel / Stainless Steel

THE OUTDOOR PLUS
USA MANUFACTURER OF FIRE & WATER FEATURES

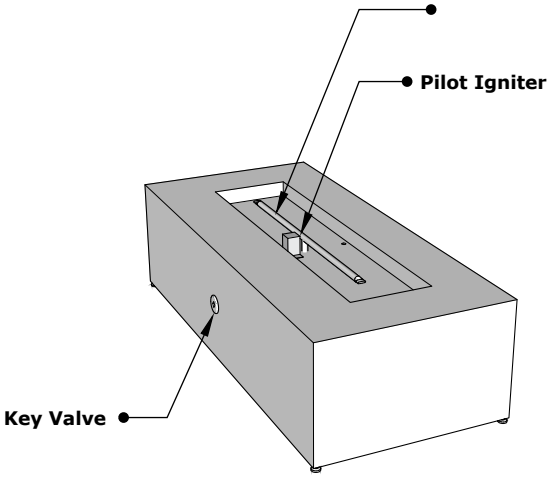

ISOMETRIC VIEW

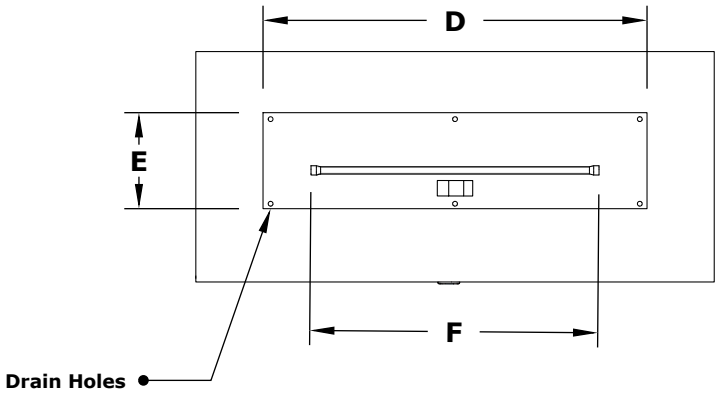

TOP VIEW

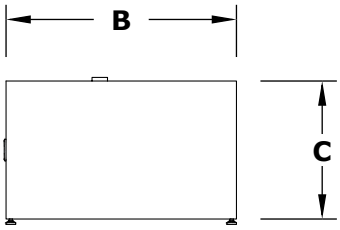

RIGHT SIDE VIEW

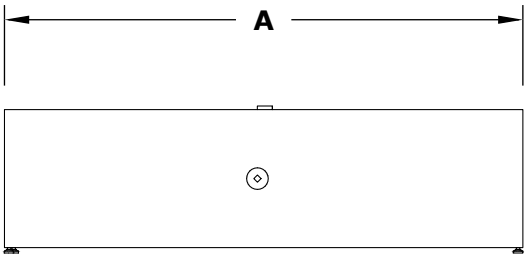

FRONT SIDE VIEW

Hammered Copper	Corten Steel	Stainless Steel	A	B	C	D	E	F	BTU
OPT-RGLCPR60	OPT-RGLCS60	OPT-RGLSS60	60"	24"	13"	48"	10"	42"	65,000
OPT-RGLCPR60EKIT	OPT-RGLCS60EKIT	OPT-RGLSS60EKIT	60"	24"	13"	48"	10"	42"	65,000
OPT-RGLCPR60E12V	OPT-RGLCS60E12V	OPT-RGLSS60E12V	60"	24"	13"	48"	10"	42"	65,000
OPT-RGLCPR60FSML	OPT-RGLCS60FSML	OPT-RGLSS60FSML	60"	24"	13"	48"	10"	42"	65,000
OPT-RGLCPR60FSEN	OPT-RGLCS60FSEN	OPT-RGLSS60FSEN	60"	24"	13"	48"	10"	42"	65,000

Fire Pit Material: Various Materials
Pan Material: 304 Stainless Steel
Burner Material: 304 Stainless Steel

Standard 2" Depth on all pans

110V ELECTRONIC IGNITION
ANSI Z21.97-(2017) / CSA 2.41-(2017)

C US

Match Lit Unit Includes: Pan, Burner, Gas Orifice, Gas Hoses, Key Valve, Key,
110v Ignition Unit Includes: Pan, Burner, Gas Orifice, Gas Hoses, Key Valve, Key, Plug & Play Electronic Valve, Pilot Igniter.

Proprietary & Confidential: The information contained in this drawing is the sole property of ***The Outdoor Plus***. Any reproduction or as a whole without written permission of ***The Outdoor Plus*** is prohibited.

REGAL FIRE PIT - 48"

Hammered Copper/Corten Steel/
Stainless Steel

THE OUTDOOR PLUS
USA MANUFACTURER OF FIRE & WATER FEATURES

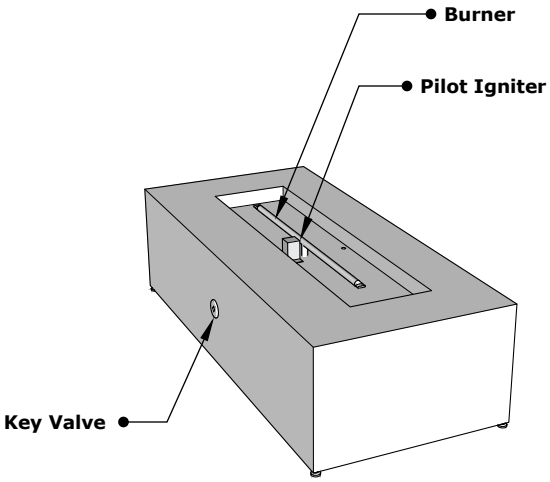

ISOMETRIC VIEW

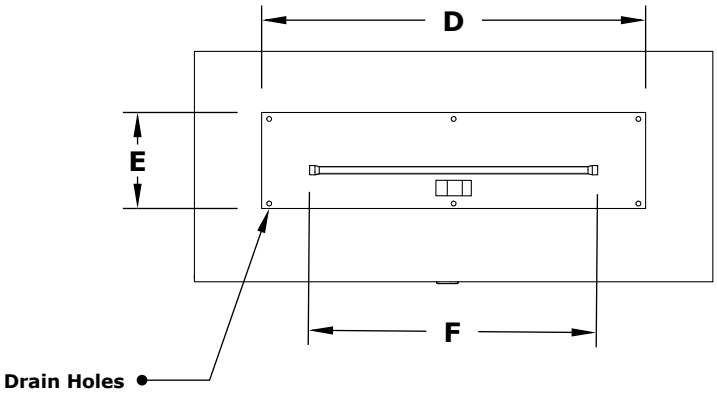

TOP VIEW

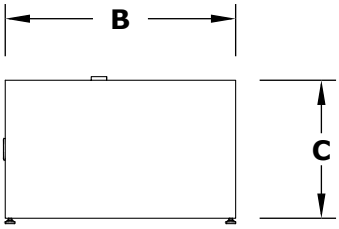

RIGHT SIDE VIEW

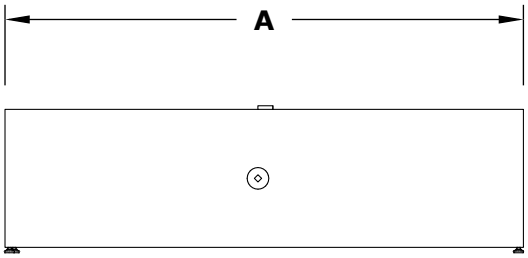

FRONT SIDE VIEW

Hammered Copper	Corten Steel	Stainless Steel	A	B	C	D	E	F	BTU
OPT-RGLCPR48	OPT-RGLCS48	OPT-RGLSS48	48"	24"	13"	34"	10"	28"	45,000
OPT-RGLCPR48EKIT	OPT-RGLCS48EKIT	OPT-RGLSS48EKIT	48"	24"	13"	34"	10"	28"	45,000
OPT-RGLCPR48E12V	OPT-RGLCS48E12V	OPT-RGLSS48E12V	48"	24"	13"	34"	10"	28"	45,000
OPT-RGLCPR48FSML	OPT-RGLCS48FSML	OPT-RGLSS48FSML	48"	24"	13"	34"	10"	28"	45,000
OPT-RGLCPR48FSEN	OPT-RGLCS48FSEN	OPT-RGLSS48FSEN	48"	24"	13"	34"	10"	28"	45,000

Fire Pit Material: Various Materials
Pan Material: 304 Stainless Steel Burner
Material: 304 Stainless Steel

Standard 2" Depth on all pans

110V ELECTRONIC IGNITION
ANSI Z21.97-(2017) / CSA 2.41-(2017)

C US

Match Lit Unit Includes: Pan, Burner, Gas Orifice, Gas Hoses, Key Valve, Key,
110v Ignition Unit Includes: Pan, Burner, Gas Orifice, Gas Hoses, Key Valve, Key, Plug & Play Electronic Valve, Pilot Igniter.

Proprietary & Confidential: The information contained in this drawing is the sole property of ***The Outdoor Plus***. Any reproduction or as a whole without written permission of ***The Outdoor Plus*** is prohibited.

REGAL FIRE PIT - 54"

Hammered Copper/ Corten Steel/ Stainless Steel

THE OUTDOOR PLUS
USA MANUFACTURER OF FIRE & WATER FEATURES

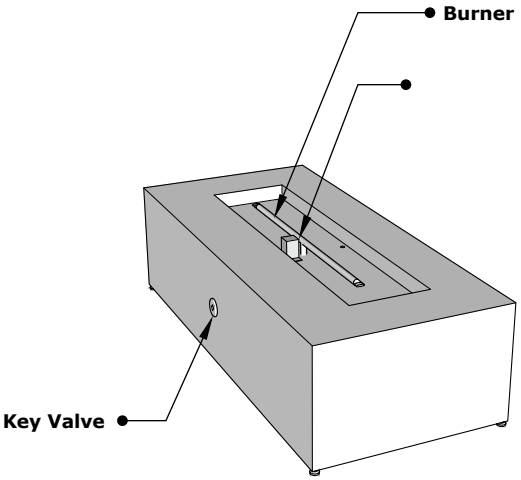

ISOMETRIC VIEW

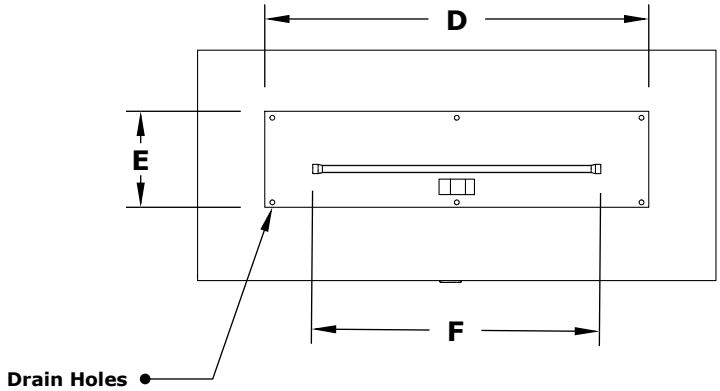

TOP VIEW

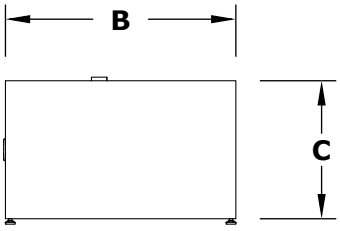

RIGHT SIDE VIEW

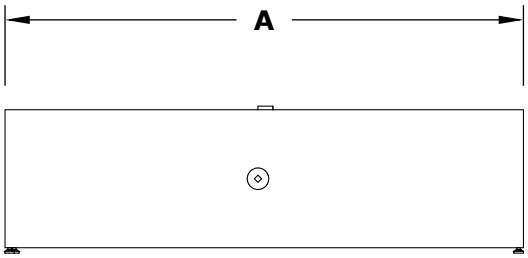

FRONT SIDE VIEW

Hammered Copper	Corten Steel	Stainless Steel	A	B	C	D	E	F	BTU
OPT-RGLCPR54	OPT-RGLCS54	OPT-RGLSS54	54"	24"	13"	40"	10"	36"	65,000
OPT-RGLCPR54EKIT	OPT-RGLCS54EKIT	OPT-RGLSS54EKIT	54"	24"	13"	40"	10"	36"	65,000
OPT-RGLCPR54E12V	OPT-RGLCS54E12V	OPT-RGLSS54E12V	54"	24"	13"	40"	10"	36"	65,000
OPT-RGLCPR54FSML	OPT-RGLCS54FSML	OPT-RGLSS54FSML	54"	24"	13"	40"	10"	36"	65,000
OPT-RGLCPR54FSEN	OPT-RGLCS54FSEN	OPT-RGLSS54FSEN	54"	24"	13"	40"	10"	36"	65,000

Fire Pit Material: Various Materials
Pan Material: 304 Stainless Steel
Burner Material: 304 Stainless Steel

Standard 2" Depth on all pans

110V ELECTRONIC IGNITION
ANSI Z21.97-(2017) / CSA 2.41-(2017)

C US

Match Lit Unit Includes: Pan, Burner, Gas Orifice, Gas Hoses, Key Valve, Key,
110v Ignition Unit Includes: Pan, Burner, Gas Orifice, Gas Hoses, Key Valve, Key, Plug & Play Electronic Valve, Pilot Igniter.

Proprietary & Confidential: The information contained in this drawing is the sole property of ***The Outdoor Plus***. Any reproduction or as a whole without written permission of ***The Outdoor Plus*** is prohibited.

REGAL FIRE PIT - 60"

Hammered Copper / Corten Steel / Stainless Steel

THE OUTDOOR PLUS
USA MANUFACTURER OF FIRE & WATER FEATURES

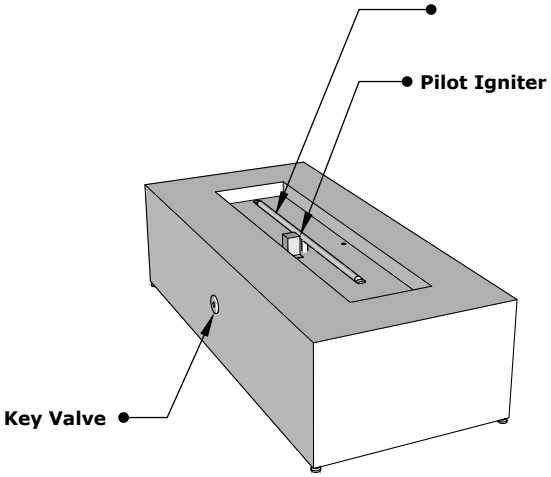

ISOMETRIC VIEW

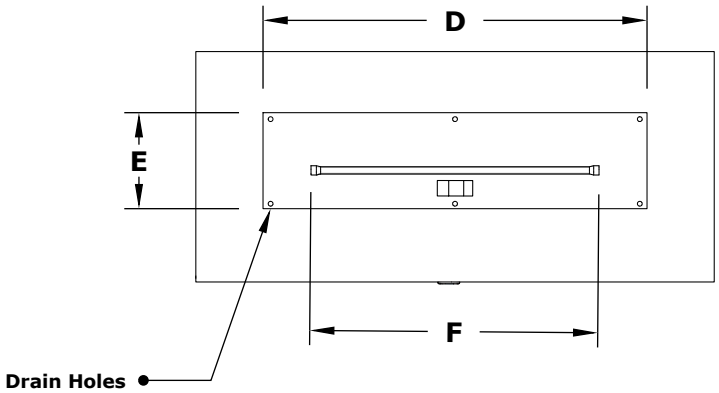

TOP VIEW

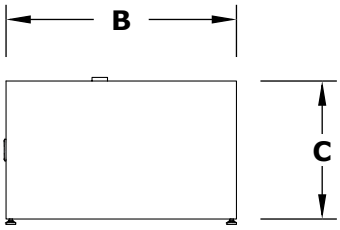

RIGHT SIDE VIEW

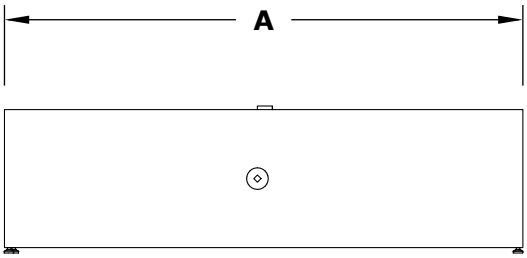

FRONT SIDE VIEW

Hammered Copper	Corten Steel	Stainless Steel	A	B	C	D	E	F	BTU
OPT-RGLCPR60	OPT-RGLCS60	OPT-RGLSS60	60"	24"	13"	48"	10"	42"	65,000
OPT-RGLCPR60EKIT	OPT-RGLCS60EKIT	OPT-RGLSS60EKIT	60"	24"	13"	48"	10"	42"	65,000
OPT-RGLCPR60E12V	OPT-RGLCS60E12V	OPT-RGLSS60E12V	60"	24"	13"	48"	10"	42"	65,000
OPT-RGLCPR60FSML	OPT-RGLCS60FSML	OPT-RGLSS60FSML	60"	24"	13"	48"	10"	42"	65,000
OPT-RGLCPR60FSEN	OPT-RGLCS60FSEN	OPT-RGLSS60FSEN	60"	24"	13"	48"	10"	42"	65,000

Fire Pit Material: Various Materials
Pan Material: 304 Stainless Steel
Burner Material: 304 Stainless Steel

Standard 2" Depth on all pans

110V ELECTRONIC IGNITION
ANSI Z21.97-(2017) / CSA 2.41-(2017)

C US

Match Lit Unit Includes: Pan, Burner, Gas Orifice, Gas Hoses, Key Valve, Key,
110v Ignition Unit Includes: Pan, Burner, Gas Orifice, Gas Hoses, Key Valve, Key, Plug & Play Electronic Valve, Pilot Igniter.

Proprietary & Confidential: The information contained in this drawing is the sole property of ***The Outdoor Plus***. Any reproduction or as a whole without written permission of ***The Outdoor Plus*** is prohibited.

REGAL FIRE PIT - 48"

Hammered Copper/Corten Steel/
Stainless Steel

THE OUTDOOR PLUS
USA MANUFACTURER OF FIRE & WATER FEATURES

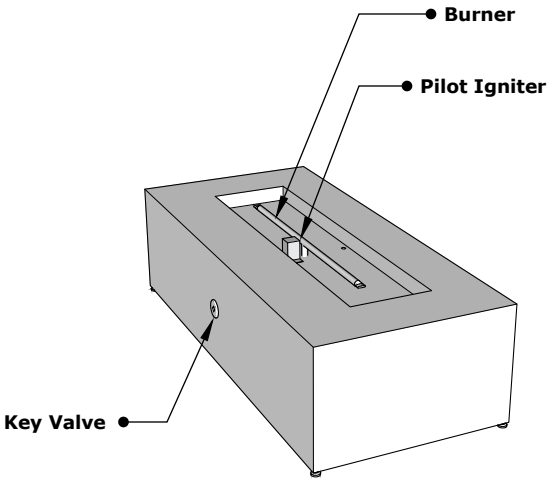

ISOMETRIC VIEW

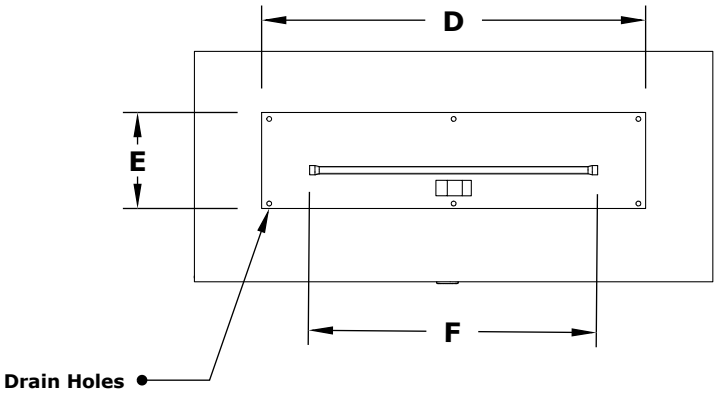

TOP VIEW

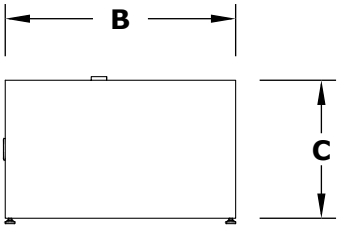

RIGHT SIDE VIEW

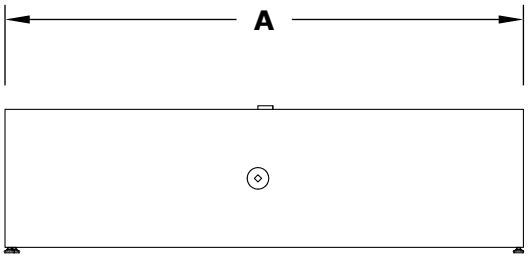

FRONT SIDE VIEW

Hammered Copper	Corten Steel	Stainless Steel	A	B	C	D	E	F	BTU
OPT-RGLCPR48	OPT-RGLCS48	OPT-RGLSS48	48"	24"	13"	34"	10"	28"	45,000
OPT-RGLCPR48EKIT	OPT-RGLCS48EKIT	OPT-RGLSS48EKIT	48"	24"	13"	34"	10"	28"	45,000
OPT-RGLCPR48E12V	OPT-RGLCS48E12V	OPT-RGLSS48E12V	48"	24"	13"	34"	10"	28"	45,000
OPT-RGLCPR48FSML	OPT-RGLCS48FSML	OPT-RGLSS48FSML	48"	24"	13"	34"	10"	28"	45,000
OPT-RGLCPR48FSEN	OPT-RGLCS48FSEN	OPT-RGLSS48FSEN	48"	24"	13"	34"	10"	28"	45,000

Fire Pit Material: Various Materials
Pan Material: 304 Stainless Steel Burner
Material: 304 Stainless Steel

Standard 2" Depth on all pans

110V ELECTRONIC IGNITION
ANSI Z21.97-(2017) / CSA 2.41-(2017)

C US

Match Lit Unit Includes: Pan, Burner, Gas Orifice, Gas Hoses, Key Valve, Key,
110v Ignition Unit Includes: Pan, Burner, Gas Orifice, Gas Hoses, Key Valve, Key, Plug & Play Electronic Valve, Pilot Igniter.

Proprietary & Confidential: The information contained in this drawing is the sole property of ***The Outdoor Plus***. Any reproduction or as a whole without written permission of ***The Outdoor Plus*** is prohibited.

REGAL FIRE PIT - 54"

Hammered Copper/ Corten Steel/ Stainless Steel

THE OUTDOOR PLUS
USA MANUFACTURER OF FIRE & WATER FEATURES

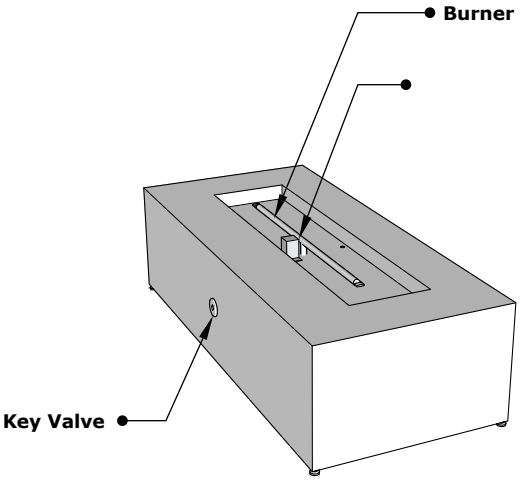

ISOMETRIC VIEW

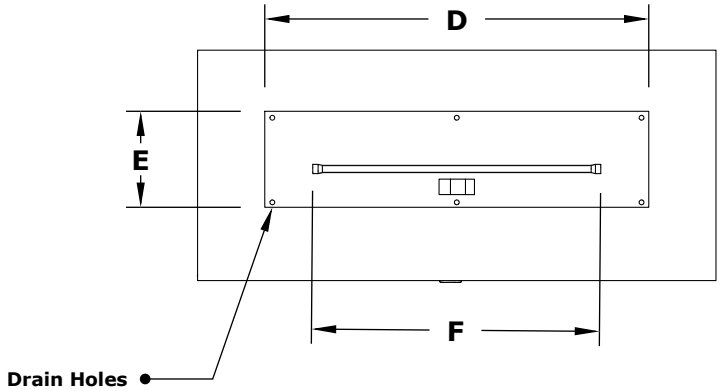

TOP VIEW

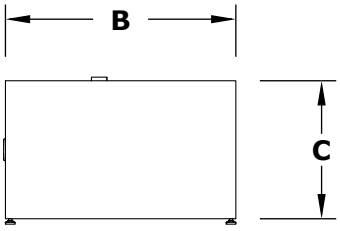

RIGHT SIDE VIEW

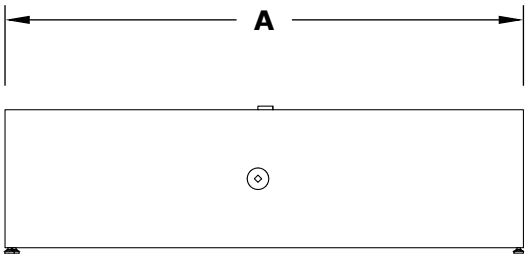

FRONT SIDE VIEW

Hammered Copper	Corten Steel	Stainless Steel	A	B	C	D	E	F	BTU
OPT-RGLCPR54	OPT-RGLCS54	OPT-RGLSS54	54"	24"	13"	40"	10"	36"	65,000
OPT-RGLCPR54EKIT	OPT-RGLCS54EKIT	OPT-RGLSS54EKIT	54"	24"	13"	40"	10"	36"	65,000
OPT-RGLCPR54E12V	OPT-RGLCS54E12V	OPT-RGLSS54E12V	54"	24"	13"	40"	10"	36"	65,000
OPT-RGLCPR54FSML	OPT-RGLCS54FSML	OPT-RGLSS54FSML	54"	24"	13"	40"	10"	36"	65,000
OPT-RGLCPR54FSEN	OPT-RGLCS54FSEN	OPT-RGLSS54FSEN	54"	24"	13"	40"	10"	36"	65,000

Fire Pit Material: Various Materials
Pan Material: 304 Stainless Steel
Burner Material: 304 Stainless Steel

Standard 2" Depth on all pans

110V ELECTRONIC IGNITION
ANSI Z21.97-(2017) / CSA 2.41-(2017)

C US

Match Lit Unit Includes: Pan, Burner, Gas Orifice, Gas Hoses, Key Valve, Key,
110v Ignition Unit Includes: Pan, Burner, Gas Orifice, Gas Hoses, Key Valve, Key, Plug & Play Electronic Valve, Pilot Igniter.

Proprietary & Confidential: The information contained in this drawing is the sole property of ***The Outdoor Plus***. Any reproduction or as a whole without written permission of ***The Outdoor Plus*** is prohibited.

REGAL FIRE PIT - 60"

Hammered Copper / Corten Steel / Stainless Steel

THE OUTDOOR PLUS
USA MANUFACTURER OF FIRE & WATER FEATURES

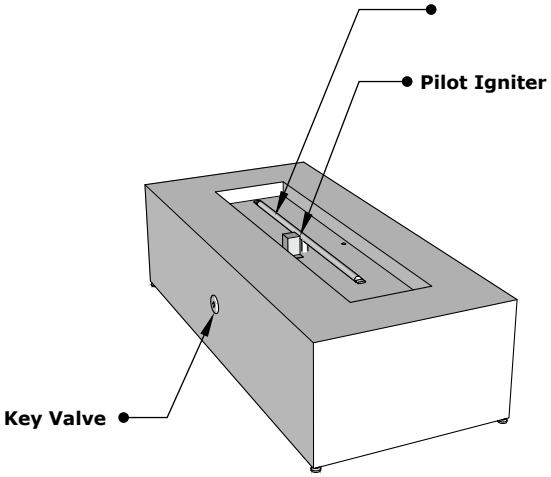

ISOMETRIC VIEW

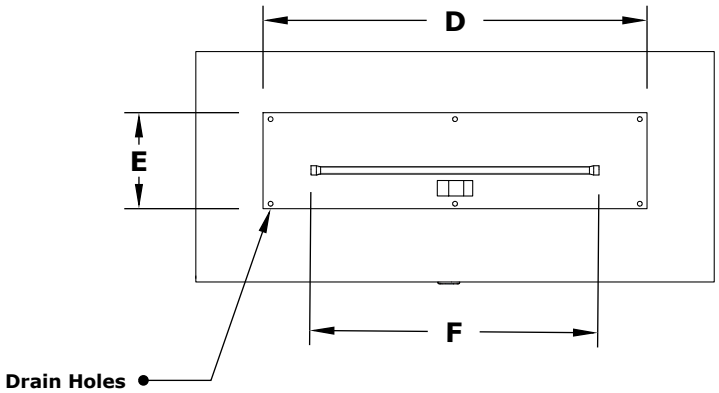

TOP VIEW

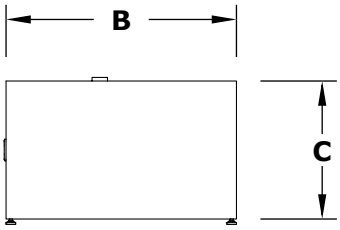

RIGHT SIDE VIEW

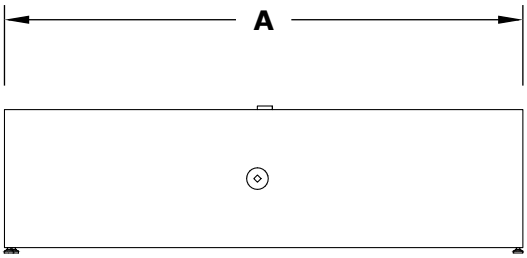

FRONT SIDE VIEW

Hammered Copper	Corten Steel	Stainless Steel	A	B	C	D	E	F	BTU
OPT-RGLCPR60	OPT-RGLCS60	OPT-RGLSS60	60"	24"	13"	48"	10"	42"	65,000
OPT-RGLCPR60EKIT	OPT-RGLCS60EKIT	OPT-RGLSS60EKIT	60"	24"	13"	48"	10"	42"	65,000
OPT-RGLCPR60E12V	OPT-RGLCS60E12V	OPT-RGLSS60E12V	60"	24"	13"	48"	10"	42"	65,000
OPT-RGLCPR60FSML	OPT-RGLCS60FSML	OPT-RGLSS60FSML	60"	24"	13"	48"	10"	42"	65,000
OPT-RGLCPR60FSEN	OPT-RGLCS60FSEN	OPT-RGLSS60FSEN	60"	24"	13"	48"	10"	42"	65,000

Fire Pit Material: Various Materials
Pan Material: 304 Stainless Steel
Burner Material: 304 Stainless Steel

Standard 2" Depth on all pans

110V ELECTRONIC IGNITION
ANSI Z21.97-(2017) / CSA 2.41-(2017)

C US

Match Lit Unit Includes: Pan, Burner, Gas Orifice, Gas Hoses, Key Valve, Key,
110v Ignition Unit Includes: Pan, Burner, Gas Orifice, Gas Hoses, Key Valve, Key, Plug & Play Electronic Valve, Pilot Igniter.

Proprietary & Confidential: The information contained in this drawing is the sole property of ***The Outdoor Plus***. Any reproduction or as a whole without written permission of ***The Outdoor Plus*** is prohibited.

REGAL FIRE PIT - 48"

Hammered Copper/Corten Steel/
Stainless Steel

THE OUTDOOR PLUS
USA MANUFACTURER OF FIRE & WATER FEATURES

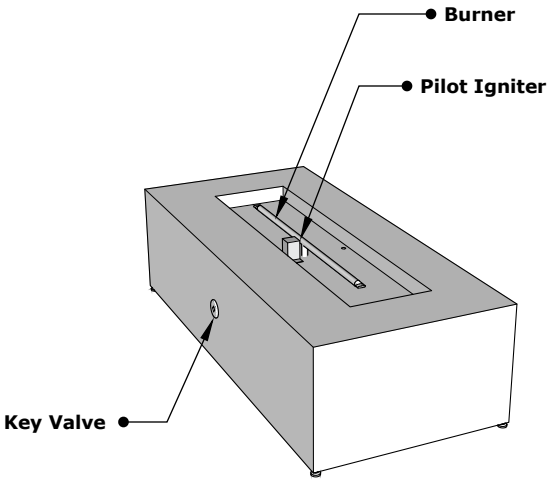

ISOMETRIC VIEW

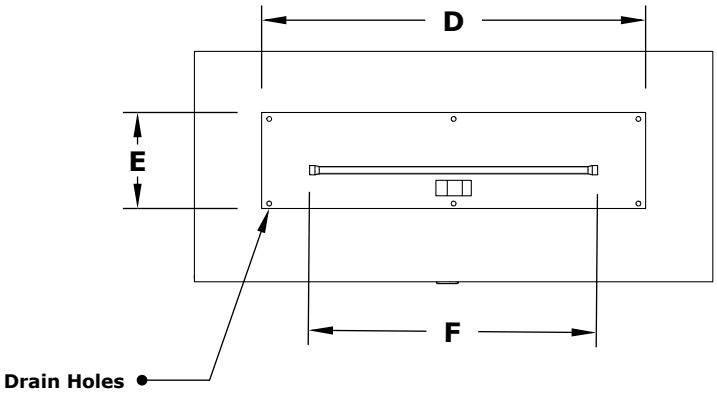

TOP VIEW

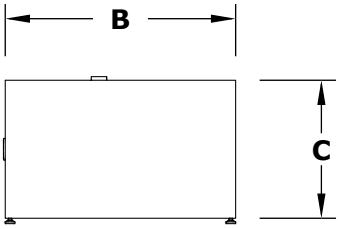

RIGHT SIDE VIEW

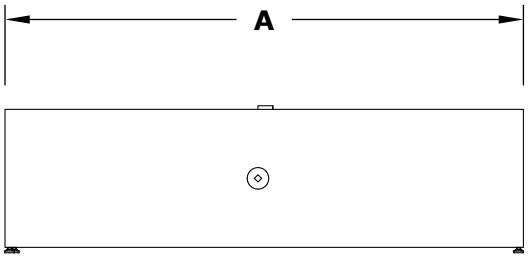

FRONT SIDE VIEW

Hammered Copper	Corten Steel	Stainless Steel	A	B	C	D	E	F	BTU
OPT-RGLCPR48	OPT-RGLCS48	OPT-RGLSS48	48"	24"	13"	34"	10"	28"	45,000
OPT-RGLCPR48EKIT	OPT-RGLCS48EKIT	OPT-RGLSS48EKIT	48"	24"	13"	34"	10"	28"	45,000
OPT-RGLCPR48E12V	OPT-RGLCS48E12V	OPT-RGLSS48E12V	48"	24"	13"	34"	10"	28"	45,000
OPT-RGLCPR48FSML	OPT-RGLCS48FSML	OPT-RGLSS48FSML	48"	24"	13"	34"	10"	28"	45,000
OPT-RGLCPR48FSEN	OPT-RGLCS48FSEN	OPT-RGLSS48FSEN	48"	24"	13"	34"	10"	28"	45,000

Fire Pit Material: Various Materials
Pan Material: 304 Stainless Steel Burner
Material: 304 Stainless Steel

Standard 2" Depth on all pans

110V ELECTRONIC IGNITION
ANSI Z21.97-(2017) / CSA 2.41-(2017)

C US

Match Lit Unit Includes: Pan, Burner, Gas Orifice, Gas Hoses, Key Valve, Key,
110v Ignition Unit Includes: Pan, Burner, Gas Orifice, Gas Hoses, Key Valve, Key, Plug & Play Electronic Valve, Pilot Igniter.

Proprietary & Confidential: The information contained in this drawing is the sole property of ***The Outdoor Plus***. Any reproduction or as a whole without written permission of ***The Outdoor Plus*** is prohibited.

REGAL FIRE PIT - 54"

Hammered Copper/ Corten Steel/ Stainless Steel

THE OUTDOOR PLUS
USA MANUFACTURER OF FIRE & WATER FEATURES

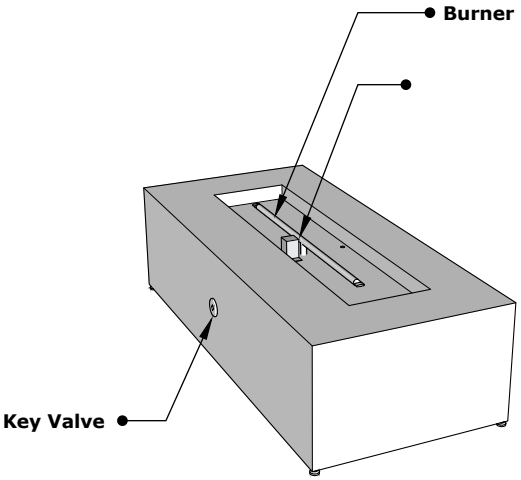

ISOMETRIC VIEW

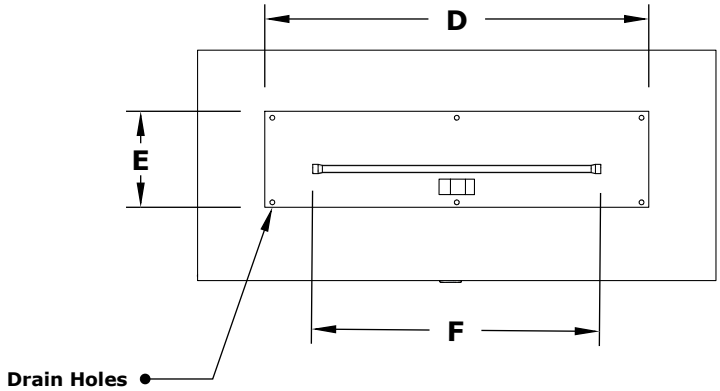

TOP VIEW

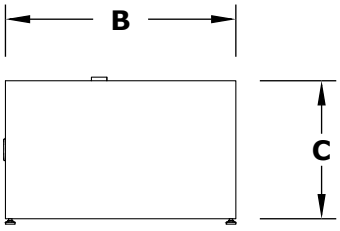

RIGHT SIDE VIEW

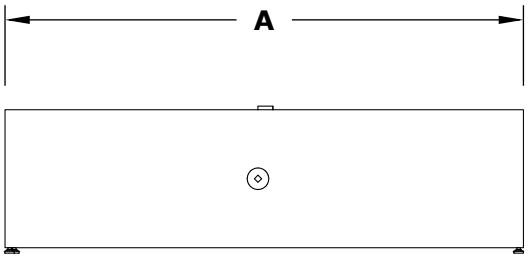

FRONT SIDE VIEW

Hammered Copper	Corten Steel	Stainless Steel	A	B	C	D	E	F	BTU
OPT-RGLCPR54	OPT-RGLCS54	OPT-RGLSS54	54"	24"	13"	40"	10"	36"	65,000
OPT-RGLCPR54EKIT	OPT-RGLCS54EKIT	OPT-RGLSS54EKIT	54"	24"	13"	40"	10"	36"	65,000
OPT-RGLCPR54E12V	OPT-RGLCS54E12V	OPT-RGLSS54E12V	54"	24"	13"	40"	10"	36"	65,000
OPT-RGLCPR54FSML	OPT-RGLCS54FSML	OPT-RGLSS54FSML	54"	24"	13"	40"	10"	36"	65,000
OPT-RGLCPR54FSEN	OPT-RGLCS54FSEN	OPT-RGLSS54FSEN	54"	24"	13"	40"	10"	36"	65,000

Fire Pit Material: Various Materials
Pan Material: 304 Stainless Steel
Burner Material: 304 Stainless Steel

Standard 2" Depth on all pans

110V ELECTRONIC IGNITION
ANSI Z21.97-(2017) / CSA 2.41-(2017)

C US

Match Lit Unit Includes: Pan, Burner, Gas Orifice, Gas Hoses, Key Valve, Key,
110v Ignition Unit Includes: Pan, Burner, Gas Orifice, Gas Hoses, Key Valve, Key, Plug & Play Electronic Valve, Pilot Igniter.

Proprietary & Confidential: The information contained in this drawing is the sole property of ***The Outdoor Plus***. Any reproduction or as a whole without written permission of ***The Outdoor Plus*** is prohibited.

REGAL FIRE PIT - 60"

Hammered Copper / Corten Steel / Stainless Steel

THE OUTDOOR PLUS
USA MANUFACTURER OF FIRE & WATER FEATURES

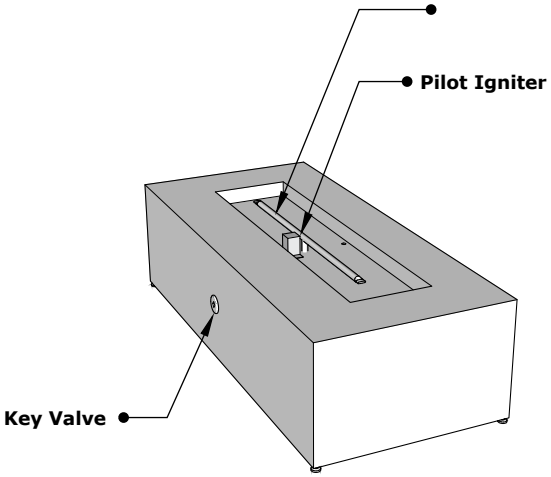

ISOMETRIC VIEW

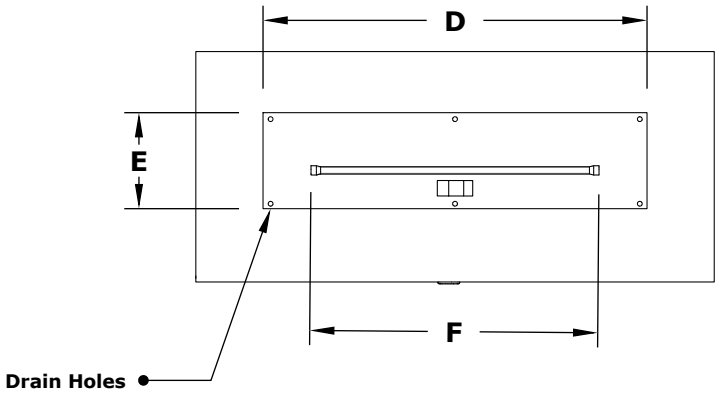

TOP VIEW

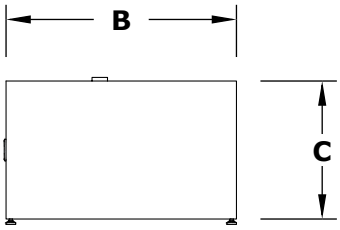

RIGHT SIDE VIEW

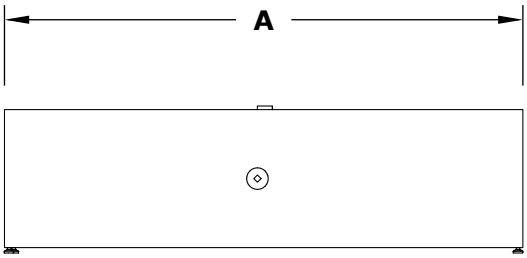

FRONT SIDE VIEW

Hammered Copper	Corten Steel	Stainless Steel	A	B	C	D	E	F	BTU
OPT-RGLCPR60	OPT-RGLCS60	OPT-RGLSS60	60"	24"	13"	48"	10"	42"	65,000
OPT-RGLCPR60EKIT	OPT-RGLCS60EKIT	OPT-RGLSS60EKIT	60"	24"	13"	48"	10"	42"	65,000
OPT-RGLCPR60E12V	OPT-RGLCS60E12V	OPT-RGLSS60E12V	60"	24"	13"	48"	10"	42"	65,000
OPT-RGLCPR60FSML	OPT-RGLCS60FSML	OPT-RGLSS60FSML	60"	24"	13"	48"	10"	42"	65,000
OPT-RGLCPR60FSEN	OPT-RGLCS60FSEN	OPT-RGLSS60FSEN	60"	24"	13"	48"	10"	42"	65,000

Fire Pit Material: Various Materials
Pan Material: 304 Stainless Steel
Burner Material: 304 Stainless Steel

Standard 2" Depth on all pans

110V ELECTRONIC IGNITION
ANSI Z21.97-(2017) / CSA 2.41-(2017)

C US

Match Lit Unit Includes: Pan, Burner, Gas Orifice, Gas Hoses, Key Valve, Key,
110v Ignition Unit Includes: Pan, Burner, Gas Orifice, Gas Hoses, Key Valve, Key, Plug & Play Electronic Valve, Pilot Igniter.

Proprietary & Confidential: The information contained in this drawing is the sole property of ***The Outdoor Plus***. Any reproduction or as a whole without written permission of ***The Outdoor Plus*** is prohibited.

REGAL FIRE PIT - 48"

GFRC CONCRETE

THE OUTDOOR PLUS
USA MANUFACTURER OF FIRE & WATER FEATURES

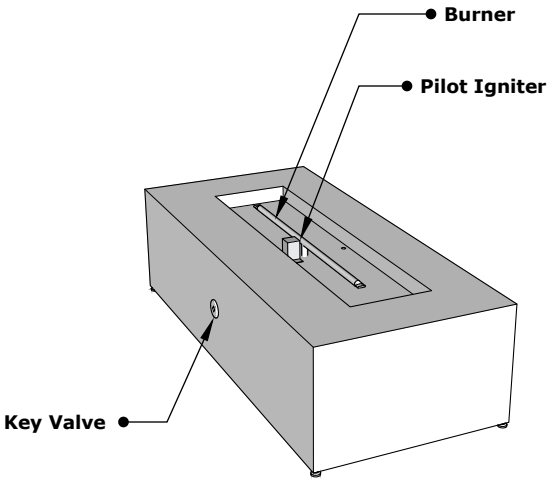

ISOMETRIC VIEW

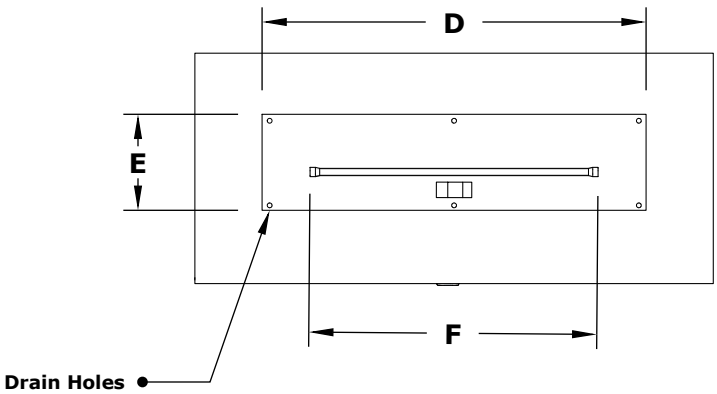

TOP VIEW

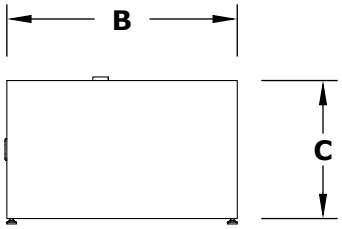

RIGHT SIDE VIEW

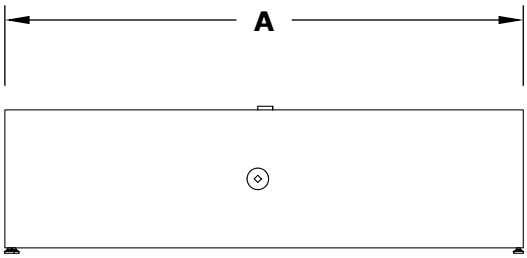

FRONT SIDE VIEW

PART NUMBER	A	B	C	D	E	F	BTU
OPT-RGL48	48"	24"	13"	34"	10"	28"	45,000
OPT-RGL48EKIT	48"	24"	13"	34"	10"	28"	45,000

Fire Pit Material: GFRC Concrete
Pan Material: 304 Stainless Steel
Burner Material: 304 Stainless Steel

Standard 2" Depth on all pans

110V ELECTRONIC IGNITION
ANSI Z21.97-(2017) / CSA 2.41-(2017)

C US

Match Lit Unit Includes: Pan, Burner, Gas Orifice, Gas Hoses, Key Valve, Key,
110v Ignition Unit Includes: Pan, Burner, Gas Orifice, Gas Hoses, Key Valve, Key, Plug & Play Electronic Valve, Pilot Igniter.

Proprietary & Confidential: The information contained in this drawing is the sole property of ***The Outdoor Plus***. Any reproduction or as a whole without written permission of ***The Outdoor Plus*** is prohibited.

REGAL FIRE PIT - 54"

GFRC CONCRETE

THE OUTDOOR PLUS
USA MANUFACTURER OF FIRE & WATER FEATURES

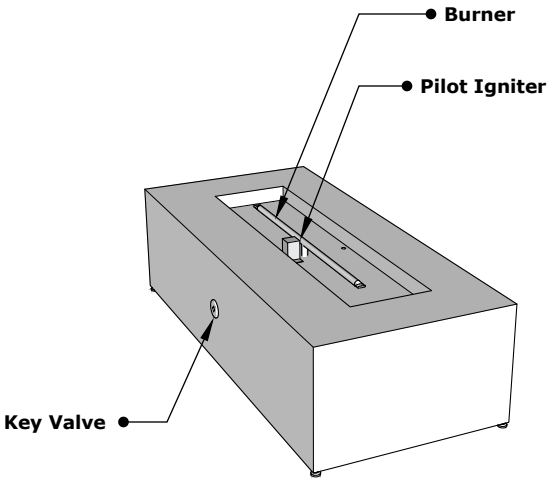

ISOMETRIC VIEW

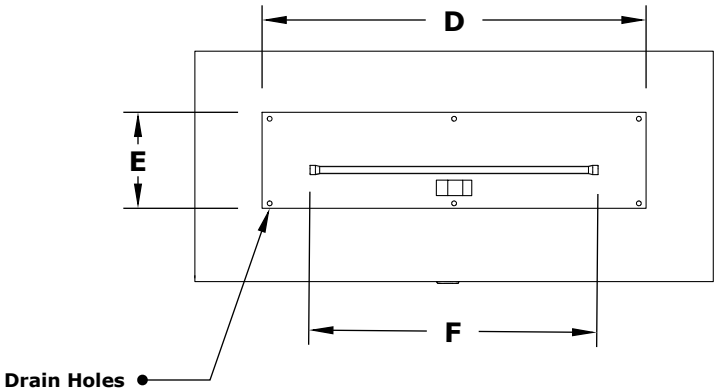

TOP VIEW

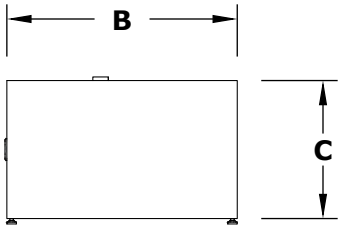

RIGHT SIDE VIEW

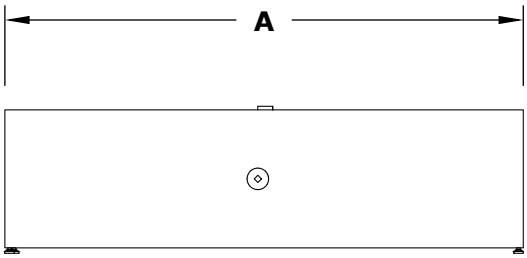

FRONT SIDE VIEW

PART NUMBER	A	B	C	D	E	F	BTU
OPT-RGL54	54"	24"	13"	40"	10"	36"	65,000
OPT-RGL54EKIT	54"	24"	13"	40"	10"	36"	65,000

Fire Pit Material: GFRC Concrete
Pan Material: 304 Stainless Steel
Burner Material: 304 Stainless Steel

Standard 2" Depth on all pans

110V ELECTRONIC IGNITION
ANSI Z21.97-(2017) / CSA 2.41-(2017)

C US

Match Lit Unit Includes: Pan, Burner, Gas Orifice, Gas Hoses, Key Valve, Key,
110v Ignition Unit Includes: Pan, Burner, Gas Orifice, Gas Hoses, Key Valve, Key, Plug & Play Electronic Valve, Pilot Igniter.

Proprietary & Confidential: The information contained in this drawing is the sole property of ***The Outdoor Plus***. Any reproduction or as a whole without written permission of ***The Outdoor Plus*** is prohibited.

REGAL FIRE PIT - 60"

GFRC CONCRETE

THE OUTDOOR PLUS
USA MANUFACTURER OF FIRE & WATER FEATURES

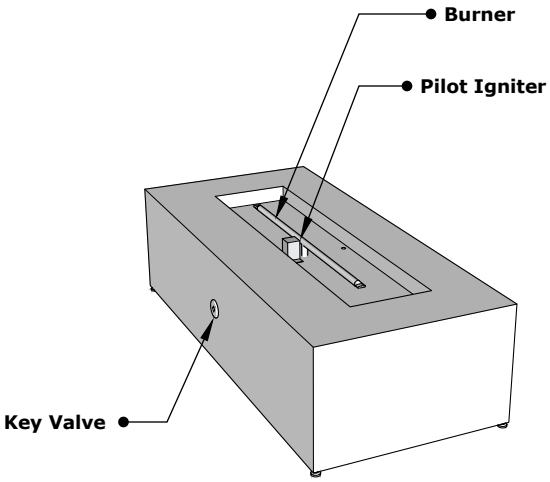

ISOMETRIC VIEW

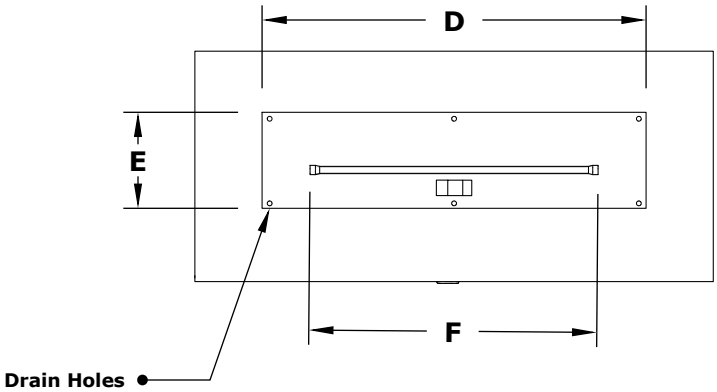

TOP VIEW

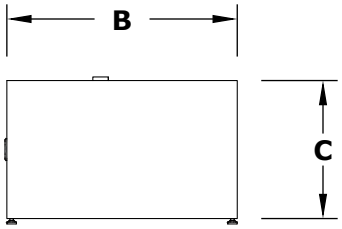

RIGHT SIDE VIEW

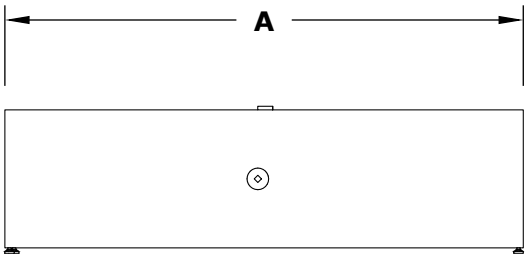

FRONT SIDE VIEW

PART NUMBER	A	B	C	D	E	F	BTU
OPT-RGL60	60"	24"	13"	48"	10"	42"	65,000
OPT-RGL60EKIT	60"	24"	13"	48"	10"	42"	65,000

Fire Pit Material: GFRC Concrete
Pan Material: 304 Stainless Steel
Burner Material: 304 Stainless Steel

Standard 2" Depth on all pans

110V ELECTRONIC IGNITION
ANSI Z21.97-(2017) / CSA 2.41-(2017)

C US

Match Lit Unit Includes: Pan, Burner, Gas Orifice, Gas Hoses, Key Valve, Key,
110v Ignition Unit Includes: Pan, Burner, Gas Orifice, Gas Hoses, Key Valve, Key, Plug & Play Electronic Valve, Pilot Igniter.

Proprietary & Confidential: The information contained in this drawing is the sole property of ***The Outdoor Plus***. Any reproduction or as a whole without written permission of ***The Outdoor Plus*** is prohibited.