Paradise Falls

Metal Options

THE OUTDOOR PLUS
USA MANUFACTURER OF FIRE & WATER FEATURES

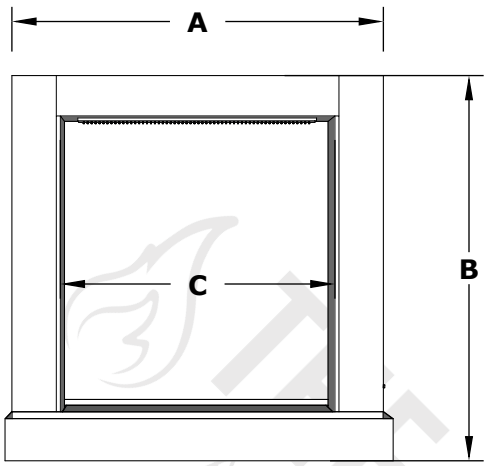

TOP VIEW

SPECIFICATION

PART NUMBER	A	B	C	D	E	F	G
OPT-PRDWO60	60"	72"	37¾"	12"	34"	30"	3"
OPT-PRDWO72	72"	84"	49¾"	12"	34"	42"	3"
OPT-PRDWO84	84"	96"	61¾"	12"	34"	54"	3"
OPT-PRDWO96	96"	96"	73¾"	12"	34"	60"	3"

Includes: Rainfall Scupper, Plug and Play Water Pump, LED Lighting
Optional: Custom Logo On Top, Custom Design

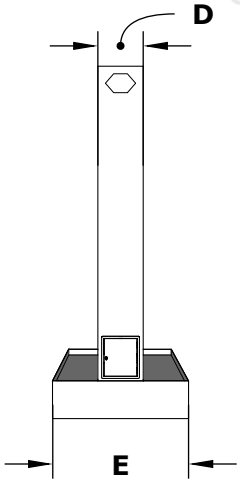

FRONT SIDE VIEW

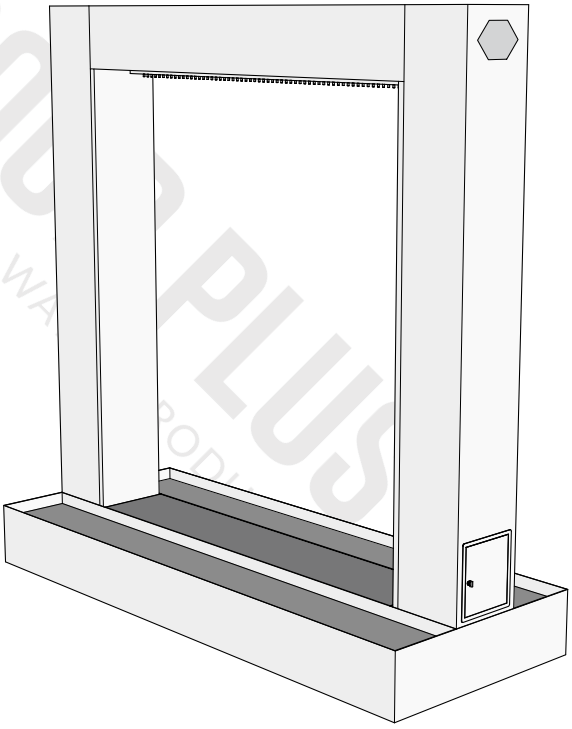

ISOMETRIC VIEW

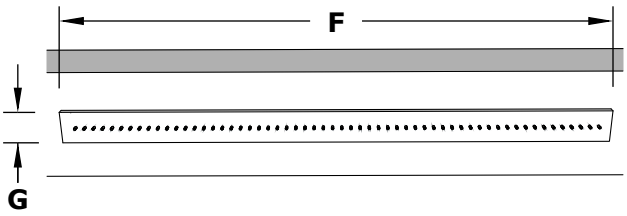



BOTTOM VIEW

Drawn By	Daniel M
Date Created	February 26, 2024

Proprietary & Confidential: The information contained in this drawing is the sole property of ***The Outdoor Plus***. Any reproduction or as a whole without written permission of ***The Outdoor Plus*** is prohibited.