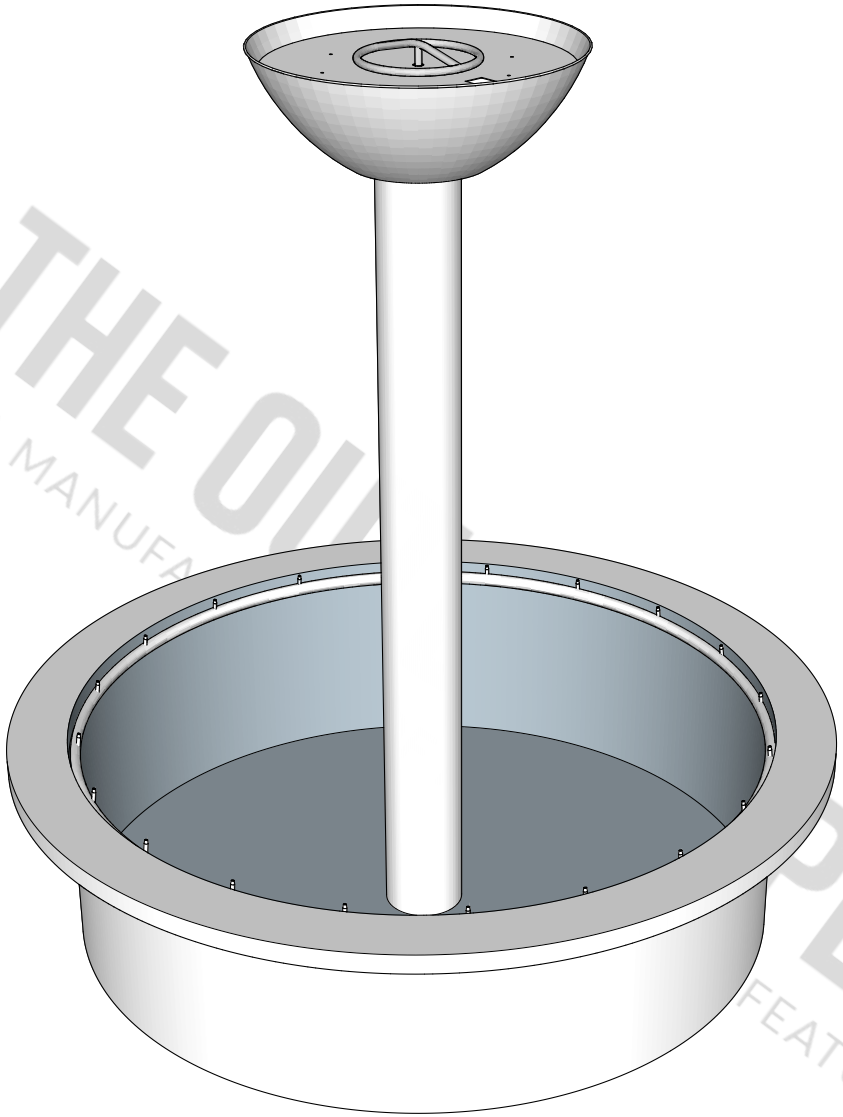

ISOMETRIC VIEW

		72" Osiris Self-Contained Unit	
Drawn By	Daniel M.		
Reference	72" Osiris	SKU	OPT-OSR60E
Company	The Outdoor Plus	Material	Powder Coat / Copper
Date Created	June 3, 2022	Finish	Powder Coat / Copper
Revision #1		Gas Type	LP or NG
Revision #2		BTUs	65,000

Proprietary & Confidential: The information contained in this drawing is the sole property of***The Outdoor Plus***. Any reproduction or as a whole without written permission of***The Outdoor Plus*** is prohibited.

THEOUTDOORPLUS.COM | SALES@THEOUTDOORPLUS.COM | Main Phone: (909) 460-5579 | Fax: (909) 460-5530 | 701 S Dupont Ave Ontario, California 91761, U.S.A

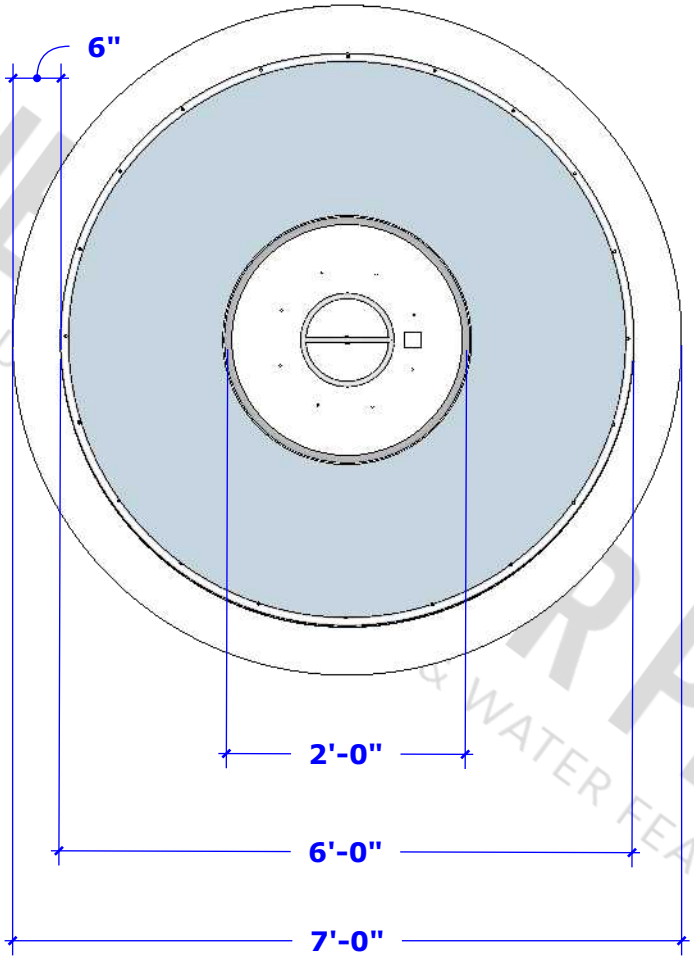

FRONT SIDE VIEW

		72" Osiris Self-Contained Unit	
Drawn By	Daniel M.		
Reference	72" Osiris	SKU	OPT-OSR60E
Company	The Outdoor Plus	Material	Powder Coat / Copper
Date Created	June 3, 2022	Finish	Powder Coat / Copper
Revision #1		Gas Type	LP or NG
Revision #2		BTUs	65,000

Proprietary & Confidential: The information contained in this drawing is the sole property of***The Outdoor Plus***. Any reproduction or as a whole without written permission of***The Outdoor Plus*** is prohibited.

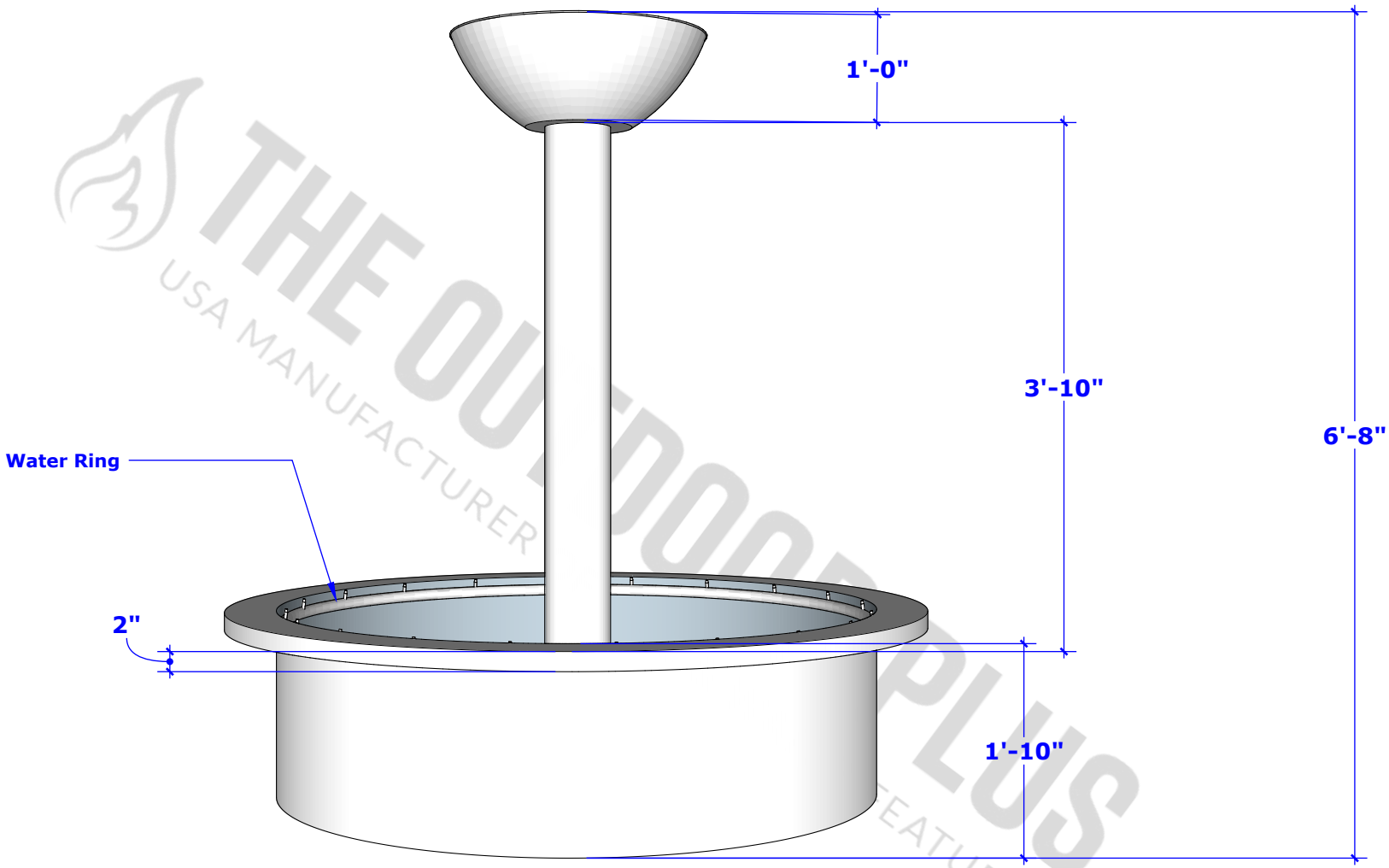

FRONT SIDE VIEW

		72" Osiris Self-Contained Unit	
Drawn By	Daniel M.		
Reference	72" Osiris	SKU	OPT-OSR60E
Company	The Outdoor Plus	Material	Powder Coat / Copper
Date Created	June 3, 2022	Finish	Powder Coat / Copper
Revision #1		Gas Type	LP or NG
Revision #2		BTUs	65,000

Proprietary & Confidential: The information contained in this drawing is the sole property of***The Outdoor Plus***. Any reproduction or as a whole without written permission of***The Outdoor Plus*** is prohibited.