Designer Series Feature 12

Powder Coat

THE OUTDOOR PLUS™
AMERICAN MADE FIRE & WATER FEATURES

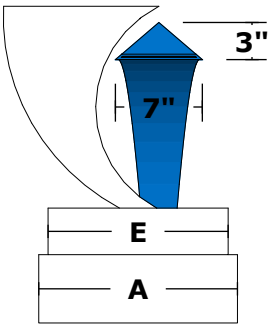

FRONT VIEW

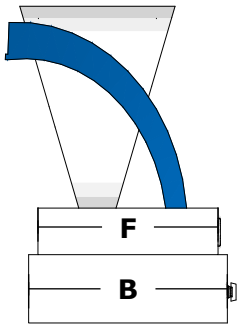

RIGHT SIDE VIEW

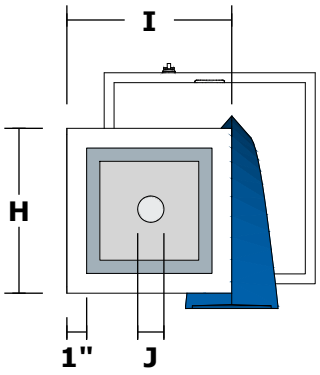

TOP VIEW

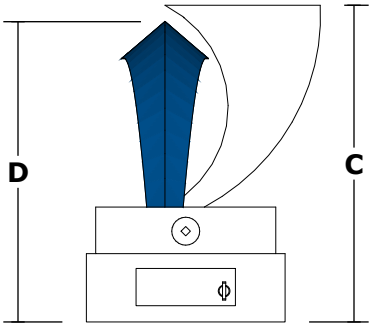

BACK VIEW

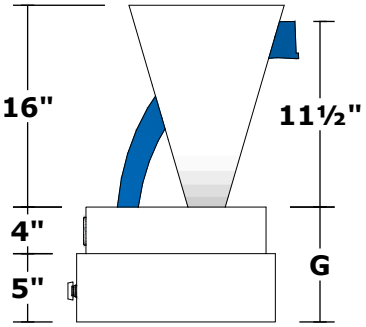

LEFT SIDE VIEW

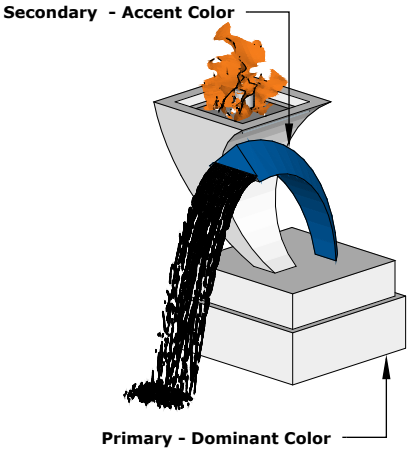

ISOMETRIC VIEW

SPECIFICATIONS

PART NUMBER	A	B	C	D	E	F	G	H	I	J
OPT-DSF12	16"	16"	25"	20½"	14½"	14½"	9"	12⅜"	12¾"	2"

WHAT'S INCLUDED?

Match Lit Unit:
- Pan, Burner, Gas Orifice, Gas Hose, Key Valve with Key

Low Voltage Electronic Ignition Unit:
- Pan, Burner, Gas Orifice, Gas Hoses, 12V Electronic Ignition, Transformer, Pilot Assembly

12V ELECTRONIC IGNITION
ANSI Z21.97-(2017) / CSA 2.41-(2017)

C US

Please Note: For a mirrored display, order one sculpture in the standard orientation and one in the inverted orientation.

Drawn By	Andrea S.
Date Created	March 6, 2026

Proprietary & Confidential: The information contained in this drawing is the sole property of ***The Outdoor Plus***. Any reproduction or as a whole without written permission of ***The Outdoor Plus*** is prohibited.