# CARMEN FIRE PIT
# 16" Tall

THE OUTDOOR PLUS
USA MANUFACTURER OF FIRE & WATER FEATURES

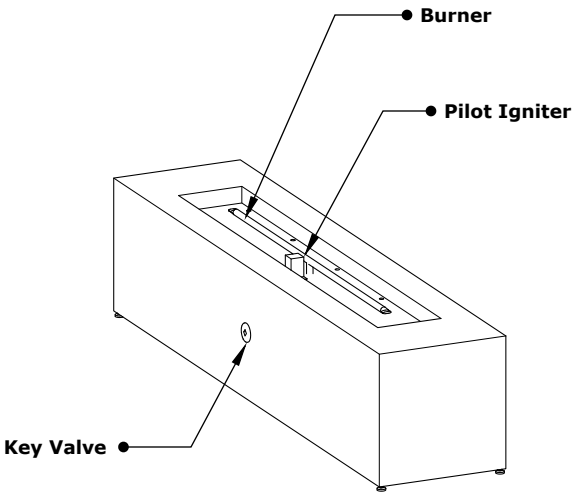


**ISOMETRIC VIEW**

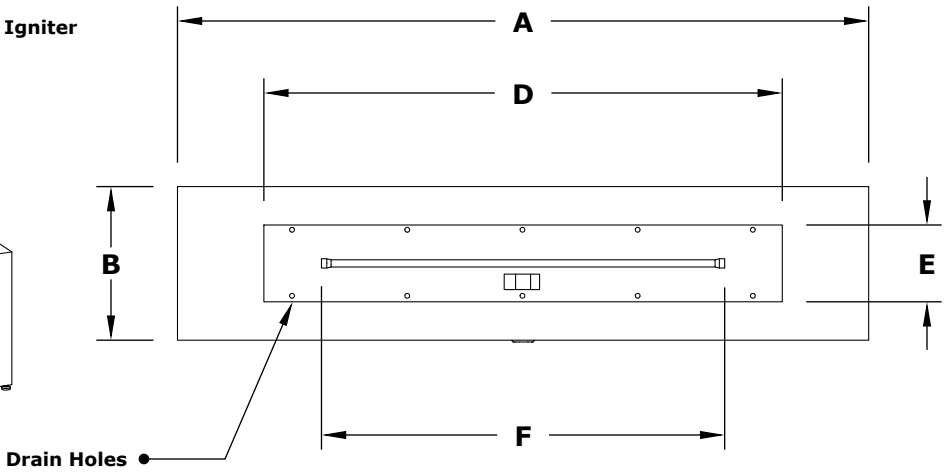


**TOP VIEW**

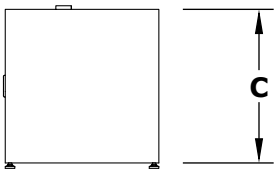


**RIGHT SIDE VIEW**

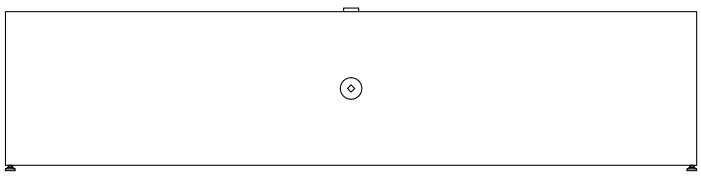

**FRONT SIDE VIEW**

| Hammered Coper | Corten Steel | Stainless Steel | Powder Coat | A | B | C | D | E | F | BTU |
|---|---|---|---|---|---|---|---|---|---|---|
| OPT-CRMCPR7216 | OPT-CRMCS7216 | OPT-CRMSS7216 | OPT-CRMPC7216 | 72" | 16" | 16" | 54" | 8" | 42" | 65,000 |

Fire Pit Material: Various Materials
Pan Material: 304 Stainless Steel
Burner Material: 304 Stainless Steel

Standard 2" Depth on all pans

**110V ELECTRONIC IGNITION**
ANSI Z21.97-(2017) / CSA 2.41-(2017)

C US

**-The inclusion of an access door is a standard feature for both LP/NG units, providing convenient accessibility**
**-Upon request, the access door can be easily removed for customized preferences**

Match Lit Unit Includes: Pan, Burner, Gas Orifice, Gas Hoses, Key Valve, Key,
110v Ignition Unit Includes: Pan, Burner, Gas Orifice, Gas Hoses, Key Valve, Key, Plug & Play Electronic Valve, Pilot Igniter.

***Proprietary & Confidential:*** The information contained in this drawing is the sole property of ***The Outdoor Plus***. Any reproduction or as a whole without written permission of ***The Outdoor Plus*** is prohibited.

# CARMEN FIRE PIT
# 24" Tall

THE OUTDOOR PLUS
USA MANUFACTURER OF FIRE & WATER FEATURES

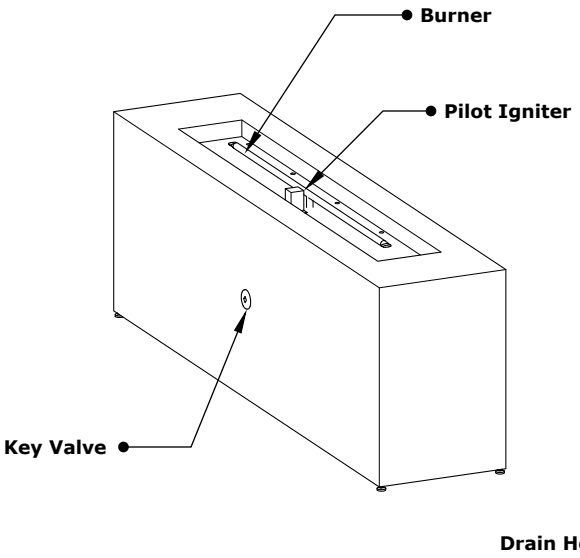


**ISOMETRIC VIEW**

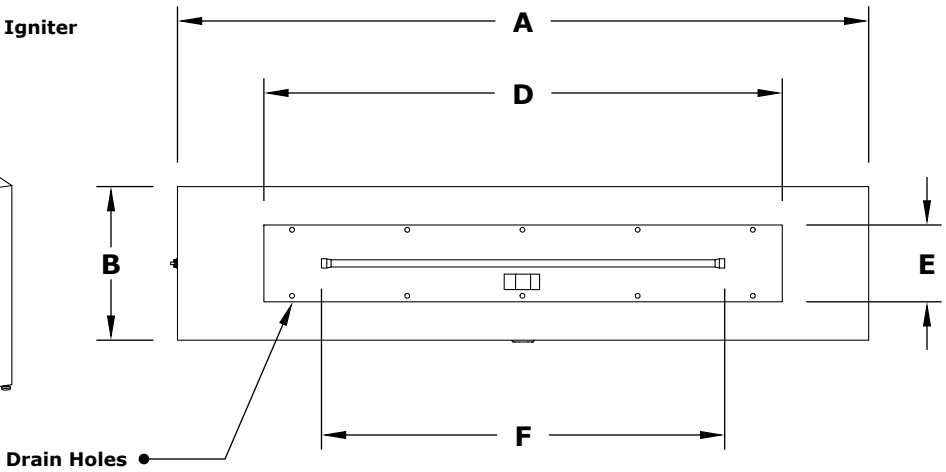


**TOP VIEW**

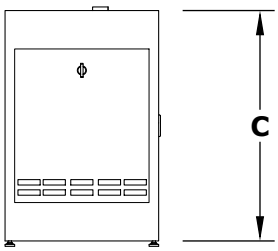


**RIGHT SIDE VIEW**

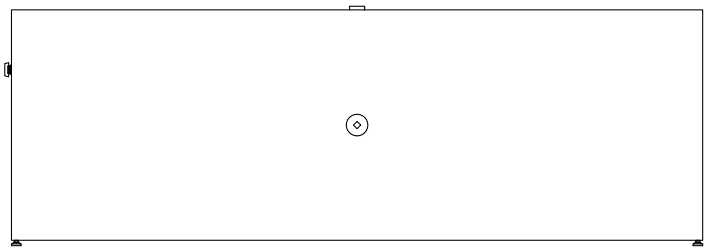

**FRONT SIDE VIEW**

| Hammered Coper | Corten Steel | Stainless Steel | Powder Coat | A | B | C | D | E | F | BTU |
|---|---|---|---|---|---|---|---|---|---|---|
| OPT-CRMCPR7224 | OPT-CRMCS7224 | OPT-CRMSS7224 | OPT-CRMPC7224 | 72" | 16" | 24" | 54" | 8" | 42" | 65,000 |

Fire Pit Material: Various Materials
Pan Material: 304 Stainless Steel
Burner Material: 304 Stainless Steel

Standard 2" Depth on all pans

**110V ELECTRONIC IGNITION**
ANSI Z21.97-(2017) / CSA 2.41-(2017)

C US

**-The inclusion of an access door is a standard feature for both LP/NG units, providing convenient accessibility**
**-Upon request, the access door can be easily removed for customized preferences**

Match Lit Unit Includes: Pan, Burner, Gas Orifice, Gas Hoses, Key Valve, Key,
110v Ignition Unit Includes: Pan, Burner, Gas Orifice, Gas Hoses, Key Valve, Key, Plug & Play Electronic Valve, Pilot Igniter.

***Proprietary & Confidential:*** The information contained in this drawing is the sole property of ***The Outdoor Plus***. Any reproduction or as a whole without written permission of ***The Outdoor Plus*** is prohibited.

# CARMEN FIRE PIT
**GFRC Concrete**

THE OUTDOOR PLUS
USA MANUFACTURER OF FIRE & WATER FEATURES

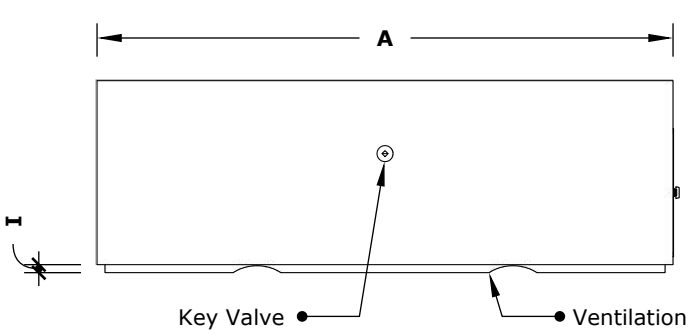


**FRONT VIEW**
*scale: 1/2" = 1'-0" (1:24)*

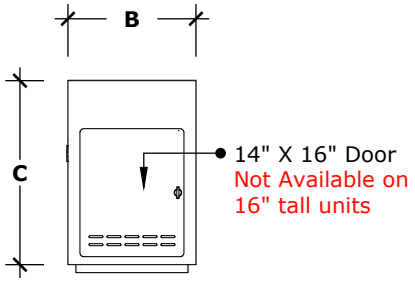


**RIGHT VIEW**
*scale: 1/2" = 1'-0" (1:24)*

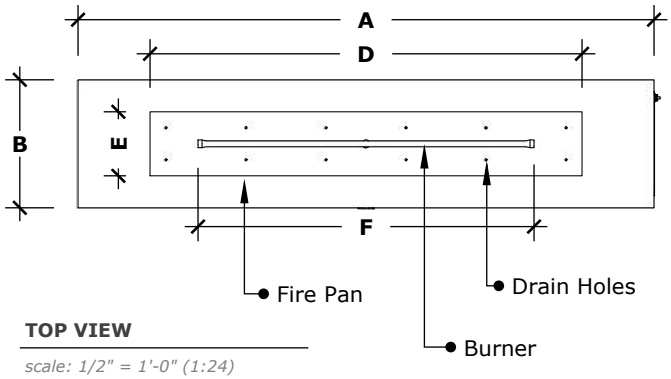


**TOP VIEW**
*scale: 1/2" = 1'-0" (1:24)*

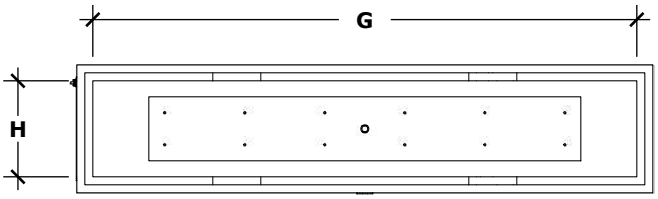


**UNDERSIDE VIEW**
*scale: 1/2" = 1'-0" (1:24)*

| SKU | A | B | C | D | E | F | G | H | I | BTU |
|---|---|---|---|---|---|---|---|---|---|---|
| OPT-CRM7216 | 72" | 16" | 16" | 52" | 8" | 44" | 48" | 5" | 1" | 65,000 |
| OPT-CRM7224 | 72" | 16" | 24" | 52" | 8" | 44" | 48" | 5" | 1" | 65,000 |

Fire Pit Material: GFRC Concrete
Pan Material: 304 Stainless Steel
Burner Material: 304 Stainless Steel

Standard 2" Depth on all pans

**Match Lit Unit Includes:** Pan, Burner, Gas Orifice, Gas Hoses, Key Valve, Key,

**110v Ignition Unit Includes:** Pan, Burner, Gas Orifice, Gas Hoses, Key Valve, Key, Plug & Play Electronic Valve, Pilot Igniter.

**110V ELECTRONIC IGNITION CERTIFICATION**
ANSI Z21.97-(2017) / CSA 2.41-(2017)

***Proprietary & Confidential:*** The information contained in this drawing is the sole property of ***The Outdoor Plus***. Any reproduction or as a whole without written permission of ***The Outdoor Plus*** is prohibited.