THE ATLANTIC - METAL
OPT-ATLXXXX

THE OUTDOOR PLUS
USA MANUFACTURER OF FIRE & WATER FEATURES

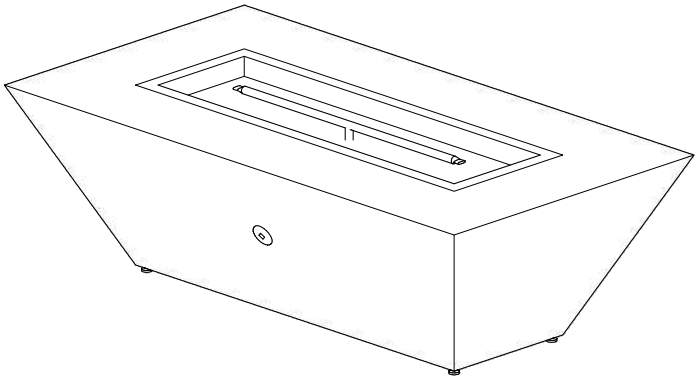

ISOMETRIC VIEW

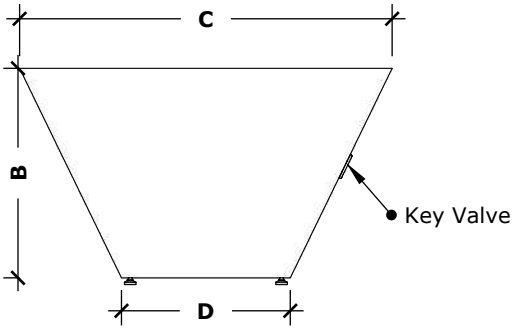

SIDE VIEW

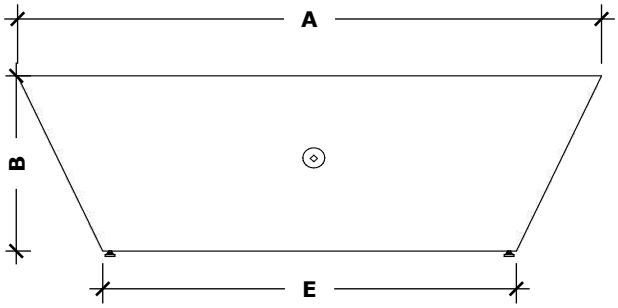

FRONT VIEW

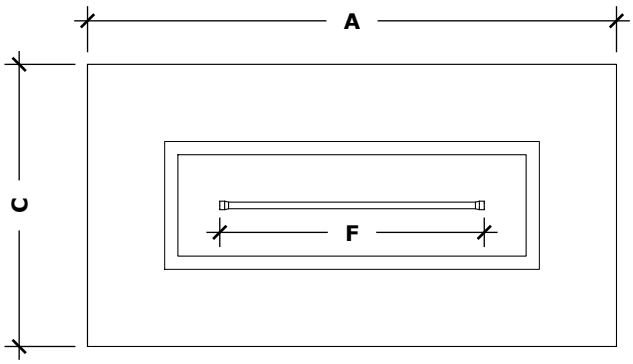

TOP VIEW

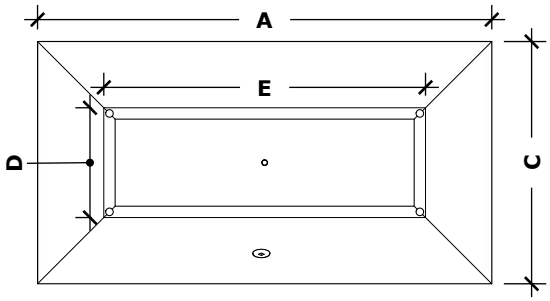

BOTTOM VIEW

SKU	A	B	C	D	E	F	BTU
OPT-ATL(XX)1848	48"	18"	30"	12.5"	30.5"	20"	65,000
OPT-ATL(XX)1860	60"	18"	32"	14.5"	42.5"	36"	65,000
OPT-ATL(XX)1872	72"	18"	36"	18.5"	54.5"	48"	65,000
OPT-ATL(XX)1884	84"	18"	36"	18.5"	66.5"	60"	65,000
OPT-ATL(XX)1896	96"	18"	36"	18.5"	78.5"	60"	65,000
OPT-ATL(XX)2448	48"	24"	30"	12.5"	30.5"	20"	65,000
OPT-ATL(XX)2460	60"	24"	32"	14.5"	42.5"	36"	65,000
OPT-ATL(XX)2472	72"	24"	36"	18.5"	54.5"	48"	65,000
OPT-ATL(XX)2484	84"	24"	36"	18.5"	66.5"	60"	65,000
OPT-ATL(XX)2496	96"	24"	36"	18.5"	78.5"	60"	65,000

Includes: Pan, Burner, NG or LP orifice, Whistle Free Hose, Black Lava Rock.

Fire Pit Material: Copper, Powder Coated Steel, Stainless Steel, or Corten Steel
Pan Material: 304 Stainless Steel
Burner Material: 304 Stainless Steel
Gas Type: Liquid Propane (Includes a Natural Gas Conversion Kit with Instructions

12V ELECTRONIC IGNITION
ANSI Z21.97-(2017) / CSA 2.41-(2017)

C US

Proprietary & Confidential: The information contained in this drawing is the sole property of ***The Outdoor Plus***. Any reproduction or as a whole without written permission of ***The Outdoor Plus*** is prohibited.

THE ATLANTIC - METAL
OPT-ATLXXXX

THE OUTDOOR PLUS
USA MANUFACTURER OF FIRE & WATER FEATURES

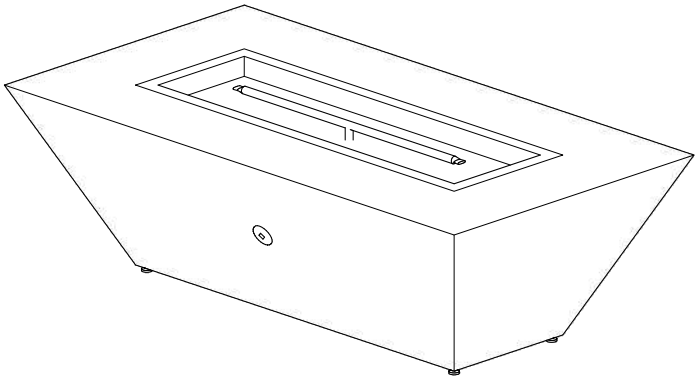

ISOMETRIC VIEW

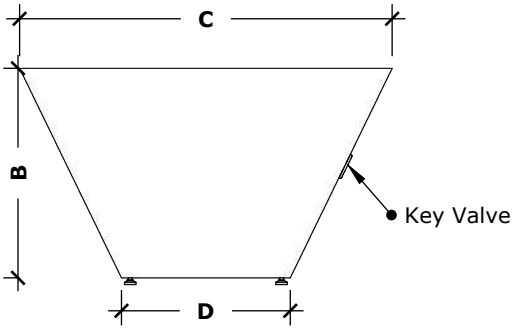

SIDE VIEW

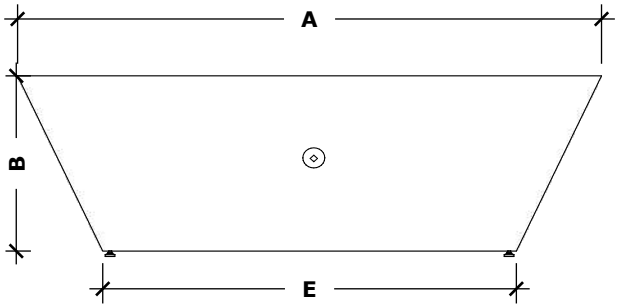

FRONT VIEW

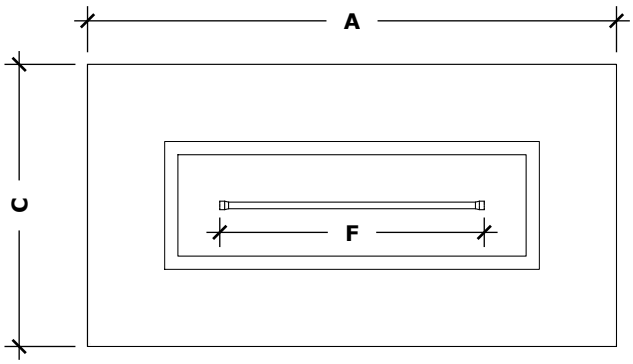

TOP VIEW

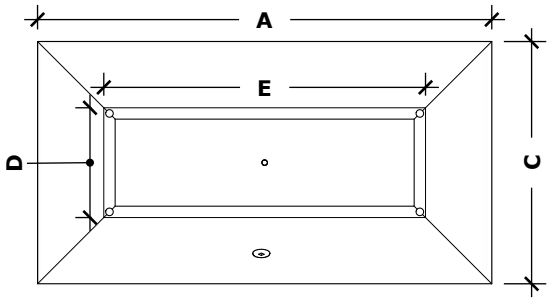

BOTTOM VIEW

SKU	A	B	C	D	E	F	BTU
OPT-ATL(XX)1848	48"	18"	30"	12.5"	30.5"	20"	65,000
OPT-ATL(XX)1860	60"	18"	32"	14.5"	42.5"	36"	65,000
OPT-ATL(XX)1872	72"	18"	36"	18.5"	54.5"	48"	65,000
OPT-ATL(XX)1884	84"	18"	36"	18.5"	66.5"	60"	65,000
OPT-ATL(XX)1896	96"	18"	36"	18.5"	78.5"	60"	65,000
OPT-ATL(XX)2448	48"	24"	30"	12.5"	30.5"	20"	65,000
OPT-ATL(XX)2460	60"	24"	32"	14.5"	42.5"	36"	65,000
OPT-ATL(XX)2472	72"	24"	36"	18.5"	54.5"	48"	65,000
OPT-ATL(XX)2484	84"	24"	36"	18.5"	66.5"	60"	65,000
OPT-ATL(XX)2496	96"	24"	36"	18.5"	78.5"	60"	65,000

Includes: Pan, Burner, NG or LP orifice, Whistle Free Hose, Black Lava Rock.

Fire Pit Material: Copper, Powder Coated Steel, Stainless Steel, or Corten Steel
Pan Material: 304 Stainless Steel
Burner Material: 304 Stainless Steel
Gas Type: Liquid Propane (Includes a Natural Gas Conversion Kit with Instructions

12V ELECTRONIC IGNITION
ANSI Z21.97-(2017) / CSA 2.41-(2017)

C US

Proprietary & Confidential: The information contained in this drawing is the sole property of ***The Outdoor Plus***. Any reproduction or as a whole without written permission of ***The Outdoor Plus*** is prohibited.

THE ATLANTIC - METAL
OPT-ATLXXXX

THE OUTDOOR PLUS
USA MANUFACTURER OF FIRE & WATER FEATURES

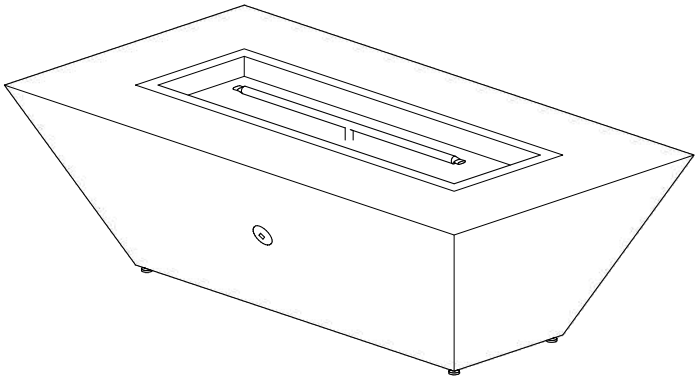

ISOMETRIC VIEW

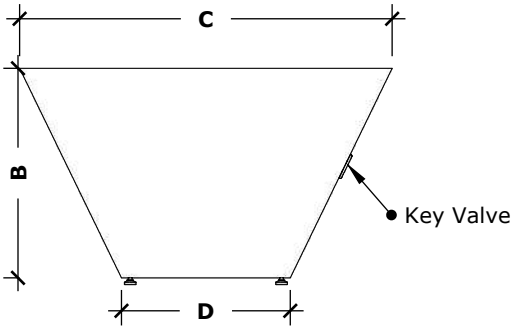

SIDE VIEW

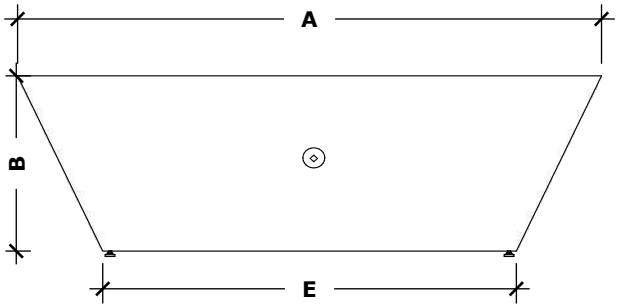

FRONT VIEW

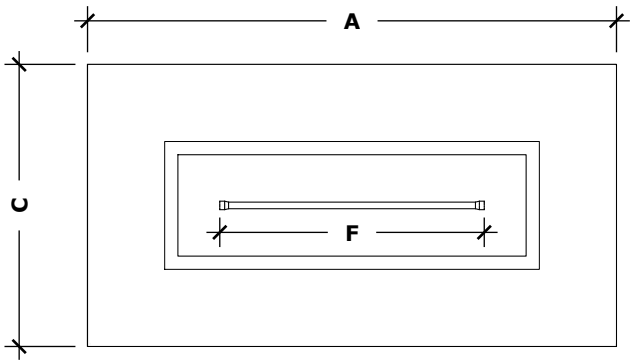

TOP VIEW

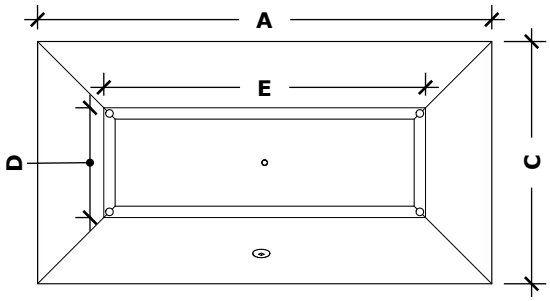

BOTTOM VIEW

SKU	A	B	C	D	E	F	BTU
OPT-ATL(XX)1848	48"	18"	30"	12.5"	30.5"	20"	65,000
OPT-ATL(XX)1860	60"	18"	32"	14.5"	42.5"	36"	65,000
OPT-ATL(XX)1872	72"	18"	36"	18.5"	54.5"	48"	65,000
OPT-ATL(XX)1884	84"	18"	36"	18.5"	66.5"	60"	65,000
OPT-ATL(XX)1896	96"	18"	36"	18.5"	78.5"	60"	65,000
OPT-ATL(XX)2448	48"	24"	30"	12.5"	30.5"	20"	65,000
OPT-ATL(XX)2460	60"	24"	32"	14.5"	42.5"	36"	65,000
OPT-ATL(XX)2472	72"	24"	36"	18.5"	54.5"	48"	65,000
OPT-ATL(XX)2484	84"	24"	36"	18.5"	66.5"	60"	65,000
OPT-ATL(XX)2496	96"	24"	36"	18.5"	78.5"	60"	65,000

Includes: Pan, Burner, NG or LP orifice, Whistle Free Hose, Black Lava Rock.

Fire Pit Material: Copper, Powder Coated Steel, Stainless Steel, or Corten Steel
Pan Material: 304 Stainless Steel
Burner Material: 304 Stainless Steel
Gas Type: Liquid Propane (Includes a Natural Gas Conversion Kit with Instructions

12V ELECTRONIC IGNITION
ANSI Z21.97-(2017) / CSA 2.41-(2017)

C US

Proprietary & Confidential: The information contained in this drawing is the sole property of ***The Outdoor Plus***. Any reproduction or as a whole without written permission of ***The Outdoor Plus*** is prohibited.

THE ATLANTIC - METAL
OPT-ATLXXXX

THE OUTDOOR PLUS
USA MANUFACTURER OF FIRE & WATER FEATURES

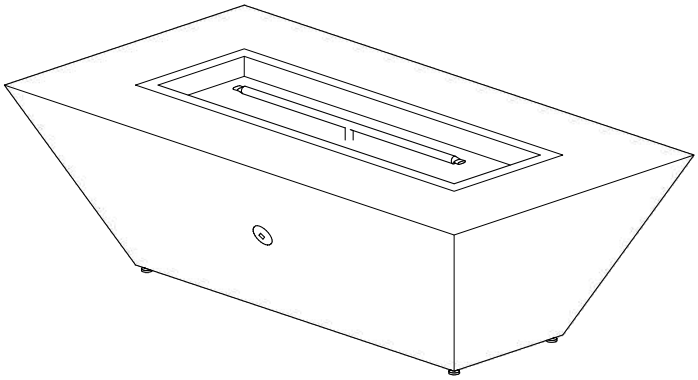

ISOMETRIC VIEW

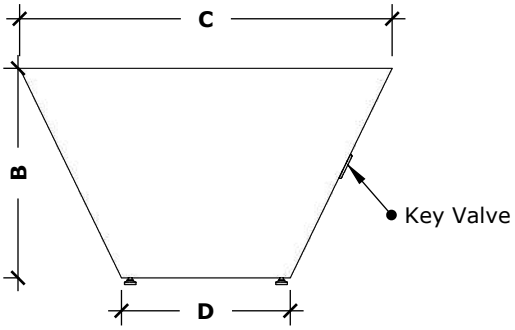

SIDE VIEW

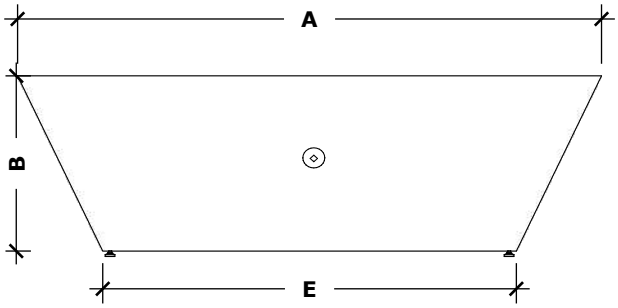

FRONT VIEW

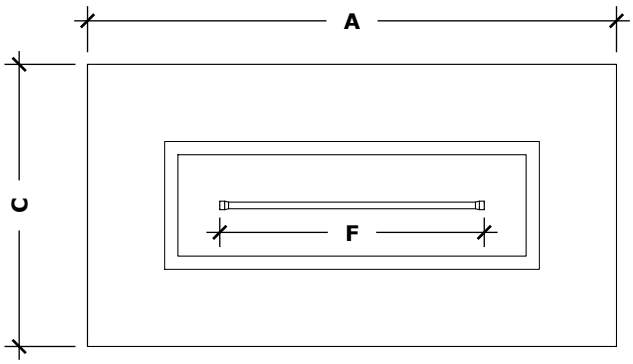

TOP VIEW

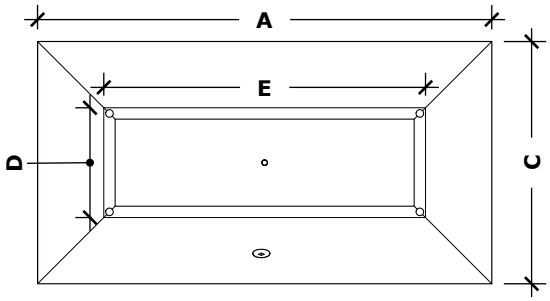

BOTTOM VIEW

SKU	A	B	C	D	E	F	BTU
OPT-ATL(XX)1848	48"	18"	30"	12.5"	30.5"	20"	65,000
OPT-ATL(XX)1860	60"	18"	32"	14.5"	42.5"	36"	65,000
OPT-ATL(XX)1872	72"	18"	36"	18.5"	54.5"	48"	65,000
OPT-ATL(XX)1884	84"	18"	36"	18.5"	66.5"	60"	65,000
OPT-ATL(XX)1896	96"	18"	36"	18.5"	78.5"	60"	65,000
OPT-ATL(XX)2448	48"	24"	30"	12.5"	30.5"	20"	65,000
OPT-ATL(XX)2460	60"	24"	32"	14.5"	42.5"	36"	65,000
OPT-ATL(XX)2472	72"	24"	36"	18.5"	54.5"	48"	65,000
OPT-ATL(XX)2484	84"	24"	36"	18.5"	66.5"	60"	65,000
OPT-ATL(XX)2496	96"	24"	36"	18.5"	78.5"	60"	65,000

Includes: Pan, Burner, NG or LP orifice, Whistle Free Hose, Black Lava Rock.

Fire Pit Material: Copper, Powder Coated Steel, Stainless Steel, or Corten Steel
Pan Material: 304 Stainless Steel
Burner Material: 304 Stainless Steel
Gas Type: Liquid Propane (Includes a Natural Gas Conversion Kit with Instructions

12V ELECTRONIC IGNITION
ANSI Z21.97-(2017) / CSA 2.41-(2017)

C US

Proprietary & Confidential: The information contained in this drawing is the sole property of ***The Outdoor Plus***. Any reproduction or as a whole without written permission of ***The Outdoor Plus*** is prohibited.